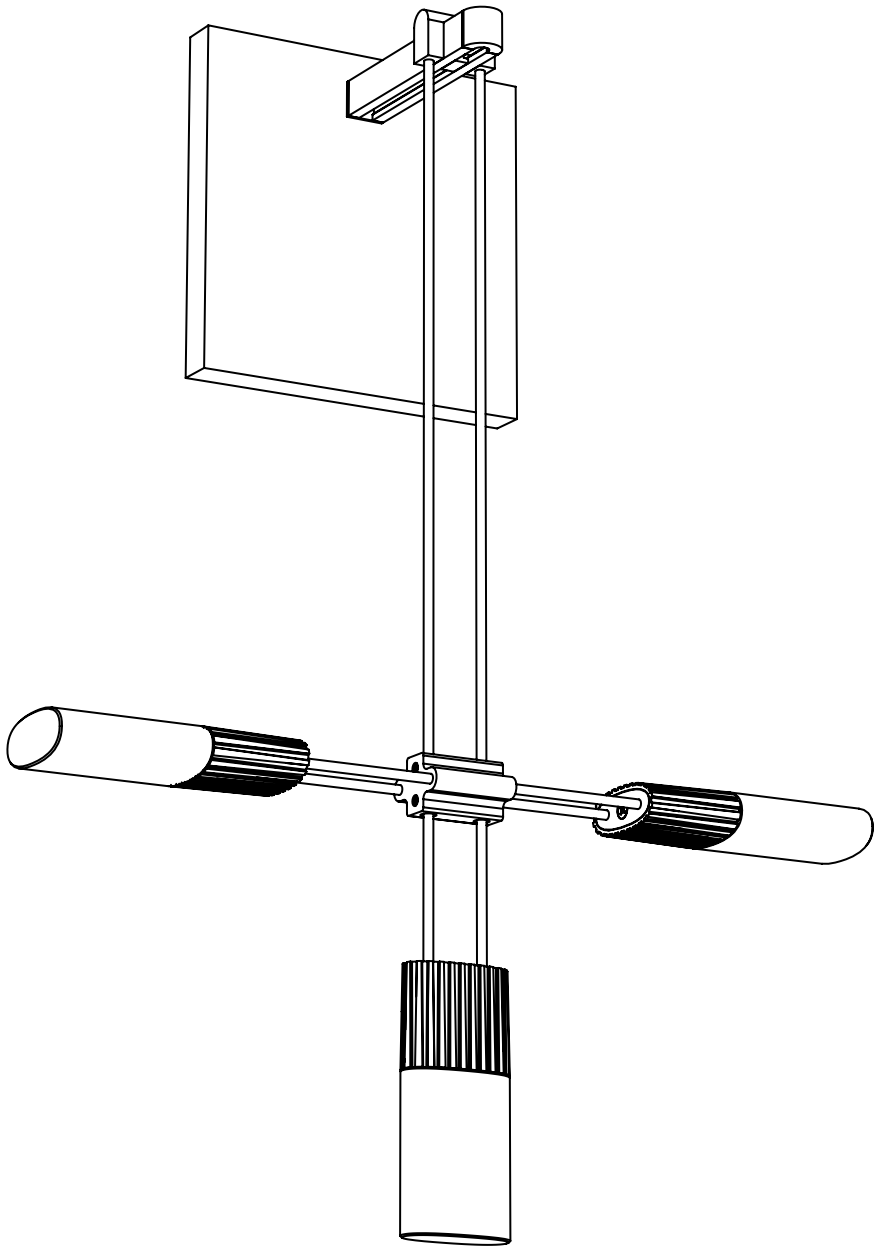

A delicately scaled, modular system of interconnected elements and suspended LED luminaires.

suspenders®

assembly instructions

Standard Single Sconce (S1L02)

SONNEMAN®
A WAY OF LIGHT

Multiple U.S. and foreign patents granted and pending.

SONNEMAN®
A WAY OF LIGHT

June 10, 2019

LED Product Information and Warnings

Important

- **Always disconnect the power before installing or replacing parts and before cleaning or other maintenance.**
- **Consult a qualified, licensed electrician to ensure correct branch circuit conductor.**

- Please read all included assembly instructions and warnings carefully before installation. Contact Customer Service if you have any questions or concerns. Before installation, please confirm that the fixture is compatible with your supply voltage and dimming system, if present.
- LEDs are highly sensitive electronic devices, and must be treated with care. Do not open any factory sealed compartments, and avoid touching the LEDs with your hands or any object.
- Although all our fixtures are equipped with protective devices, LED electronic systems are vulnerable to power surges and supply variations. Do not install LED fixtures on the same circuit as any motors, appliances, or HVAC systems.
- Do not remove or bypass any LED Driver or Transformer that is provided with the fixture, and do not replace or substitute with another power supply.
- Remote Transformer installation must be done by a licensed electrician and in accordance with local building and electrical codes. Remote installations should be in an accessible location, as close to the fixture as possible. The appropriate wire gauge must be used to limit the voltage drop to no more than 5%.
- Fixtures must be wired in parallel on independent leads; do not "daisy chain" multiple fixtures together or wire them in series.
- All factory-made splices and connections must remain intact. LED circuits are carefully designed and built, and improper connections may damage the fixture.
- Any mounting hardware is provided for your convenience and should be used with discretion. Always use the appropriate hardware for the mounting surface.
- To avoid excessive voltage drop, the longest electrical path from the Power Feed to the furthest Luminaire should not exceed 30 feet.
- Suspenders® transformers can be loaded up to 80% of their rated wattage.
- Suspenders® transformers feature short-circuit protection with automatic recovery, and will resume operation once the short-circuit condition is removed.
- Suspenders® transformers have 24V output, and are dimmable with Electronic Low Voltage dimmers ONLY.
- Suspenders® must be installed in dry locations ONLY.

©2019 SONNEMAN - A WAY OF LIGHT

Suspenders®

Contents

Power Bars 2

Power Feed Hangers 3

Ceiling Hangers 5

Wall Mount System 7

Ceiling Mount System 8

Power Bar Hanger 9

Luminaires and Luminaires Hangers 13

Suspenders Precise™ Trim Kits 22

Component Index 24

Power Feed Installation 25

Configuration Assembly 26

SONNEMAN®
A WAY OF LIGHT

SONNEMAN
A WAY OF LIGHT

June 10, 2019

Power Bars

Assembly Instructions

INSTRUCTIONS D'INSTALLATION

Applies to Components:	
1XC02XX12*x*	**1XC02XX24*x***

Tri-Bar Power Bar Assembly:

1. Insert one of the **Arms** onto the **Center Hub**, and secure with the four **Phillips Screws** (Fig. 1).
2. Repeat for the other **Arm** (Fig. 2).

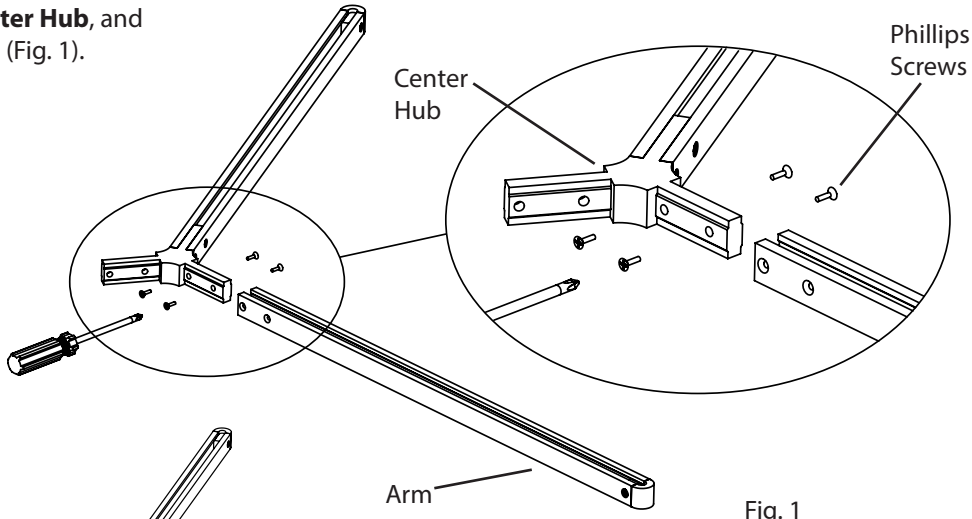

Fig. 1

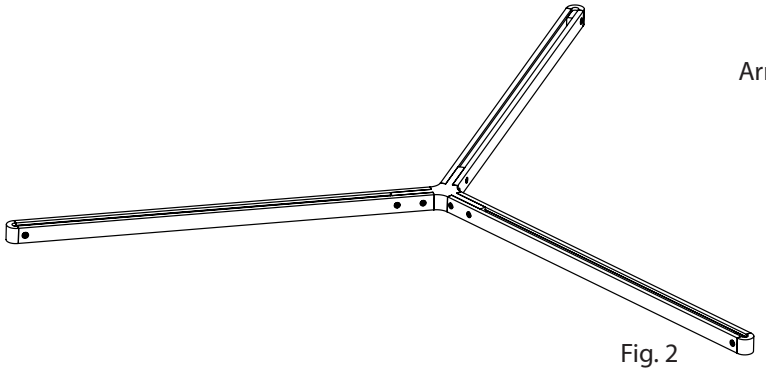

Fig. 2

Linear Power Bar Assembly:

1. The Linear **Power Bar** comes with a spacer clip pre-installed at the center of the Power Bar (Fig. 2).
2. If desired, the **Spacer Clip** can be removed using a **Phillips Screwdriver** (Fig. 4).
3. **Power Bar** must be supported at least every 4 feet.

Applies to Components:	
1XC01XX12*x*	**1XC01XX48*x***
1XC01XX24*x*	**1XC01XX72*x***
1XC01XX36*x*	**1XC01XX96*x***

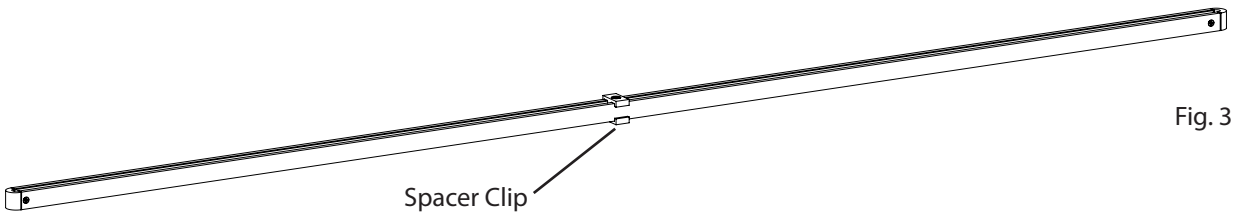

Fig. 3

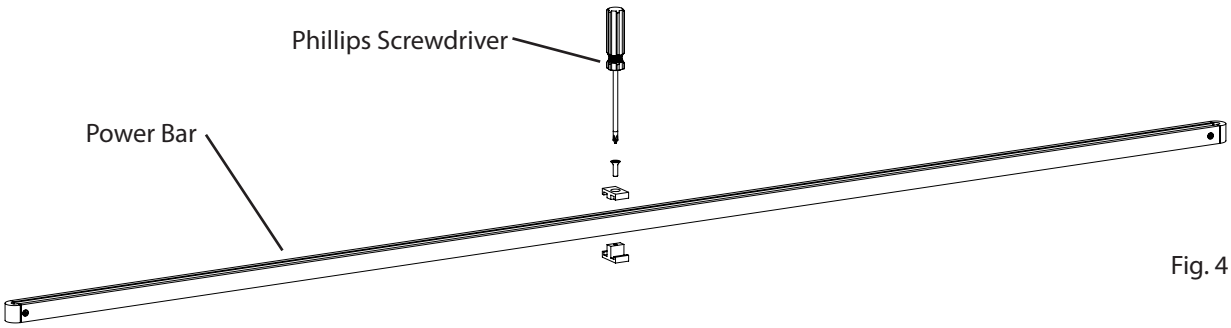

Fig. 4

©2019 SONNEMAN - A WAY OF LIGHT

SONNEMAN
A WAY OF LIGHT

Power Feed Hangers

Assembly Instructions

INSTRUCTIONS D'INSTALLATION

Single Cord Power Feed Hanger:

Applies to Components:	
1XB01SC06*x*	**1XB01RC06*x***
1XB01SC20*x*	**1XB01RC20*x***

NOTE: Each Single Cord Power Feed Hanger only carries half of the electrical circuit, and must be used in pairs. To avoid short-circuiting the system, the spring contacts must point in different directions.

1. Install the **Single Cord Power Feed Hanger** onto the **Power Bar**: pass the **Cord** through the Power Bar, tip the Hanger 45 degrees and insert the copper springs into the center of the Power Bar, then push the Hanger up while tipping it back up 45 degrees (Fig. 1).
2. Cut the **Cord** to the desired length, and remove 10mm (3/8") of insulation from the end of each Cord.
3. Twist the wire strands tightly, then insert the exposed wires into the **Power Feed Bushings**. Secure by tightening the **Set Screws** with the included **Allen key**.

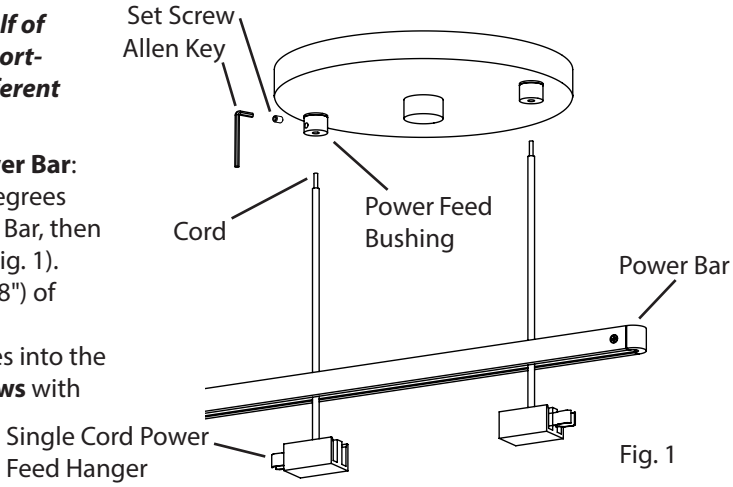

Fig. 1

Double Cord/Rod Power Feed Hanger:

Applies to Components:		
1XB01DC06*x*	**1XB01DR06*x***	**1XB01DR18*x***
1XB01DC20*x*	**1XB01DR12*x***	

1. Install the **Double Cord (or Rod) Power Feed Hanger** onto the **Power Bar**: press down firmly on the top of the Power Bar, while pressing up on the bottom of the Hanger, until the Power Bar clicks into place (Fig. 2).
2. For **Cords**:
   a. Cut the **Cords** to the desired length, and remove 10mm (3/8") of insulation from the end of each Cord.
   b. Twist the wire strands tightly, then insert the exposed wires into the **Power Feed Bushings**. Secure by tightening the **Set Screws** with the included **Allen key**.
3. For **Rods**:
   a. Cut the **Rods** to the desired length, and remove 10mm (3/8") paint from the end of each Rod using sand paper.
   b. Insert the exposed Rod into the **Power Feed Bushings**. Secure by tightening the **Set Screws** with the included **Allen key**.

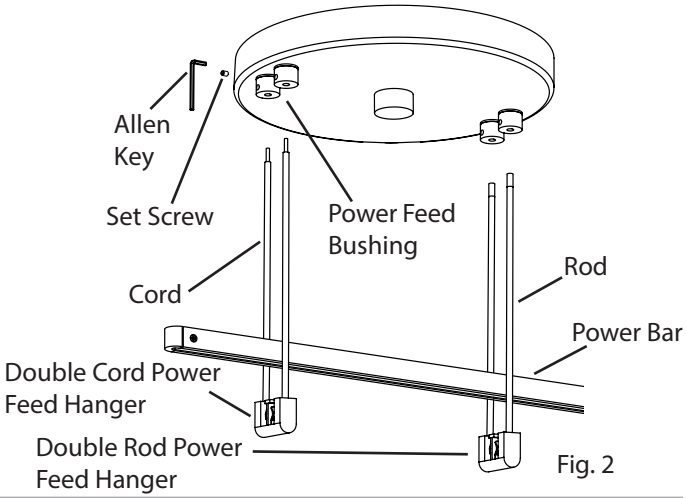

Fig. 2

In-Line Double Cord Power Feed Hanger:

Applies to Components:	
1XB01IC06*x*	**1XB01IC20*x***

1. Cut the **Cords** to the desired length, and remove 10mm (3/8") of insulation from the end of each cord.
2. Twist the wire strands tightly, then insert the exposed wires into the **Power Feed Bushings**. Secure by tightening the **Set Screws** with the included **Allen key**.
3. Press down firmly on the top of the **Power Bar**, while pressing up on the bottom of the **Hanger**, until the Power Bar clicks into place (Fig. 3). Repeat for the second Power Bar.

Note: The In-Line Double Cord Power Feed Hanger connects the two Power Bars to the same electrical circuit. It does not increase the wattage capacity of the Power Feed.

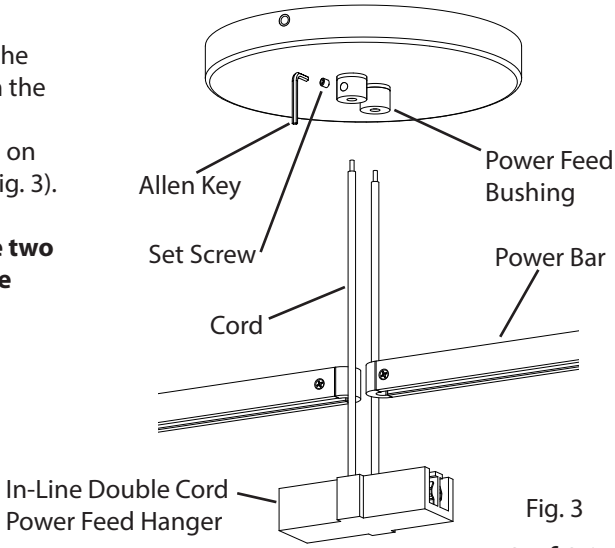

Fig. 3

©2019 SONNEMAN - A WAY OF LIGHT

SONNEMAN
A WAY OF LIGHT

June 10, 2019

Power Feed Hangers

Assembly Instructions

INSTRUCTIONS D'INSTALLATION

Applies to Components:
1XB01PT00*x*

In-Line Power Tap Hanger:

1. Install **Double Cord Power Feed Hanger** to **Lower Power Bar** and connect to the **Power Feed** by inserting the exposed wires into the **Power Feed Bushings**. Secure by tightening the **Set Screws** with the included **Allen Key** (Fig. 1).
2. Install the **Upper Power Bar** between the two cords of the **Double Cord Power Feed Hanger** using appropriate hangers.
3. Remove **Cord Caps** from **Tap Hanger** by sliding them up and off the sides of the **Tap Hanger** (Fig. 2).
4. Position **Tap Hanger** under **Upper Power Bar** at junction with **Double Cord Power Feed Hanger** (Fig. 3). Press down firmly on top of the Upper Power Bar, while pressing up on the bottom of Tap Hanger, until Tap Hanger clicks into place (Fig. 4).
5. Press each cord into the slot on each side of the **Tap Hanger** (Fig. 5).
6. To secure cord electrical connection, align **Cord Cap** over slot on each side of the **Tap Hanger,** and position the notches on bottom of the Cord Cap to face toward Tap Hanger (Fig. 6), then firmly slide down into position (Fig. 6). Repeat on opposite side.

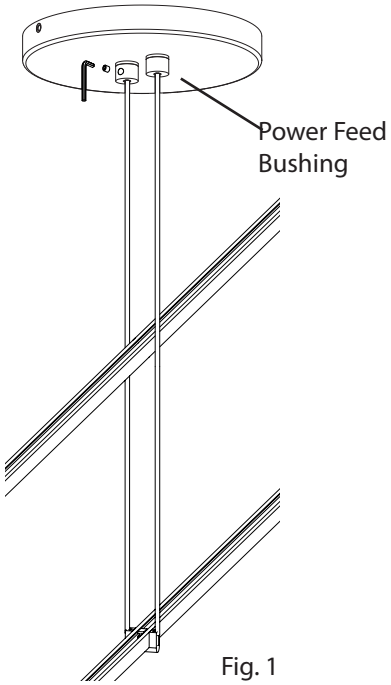

Fig. 1

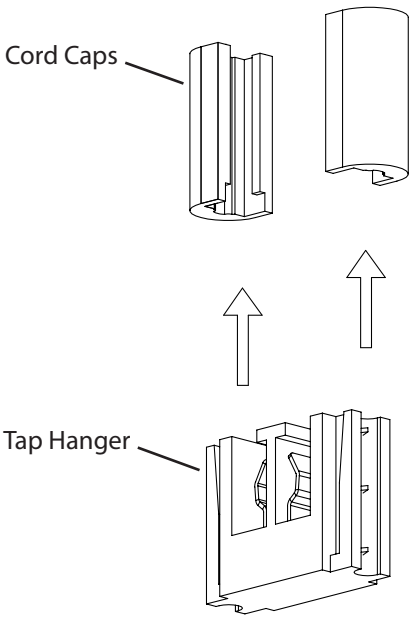

Fig. 2

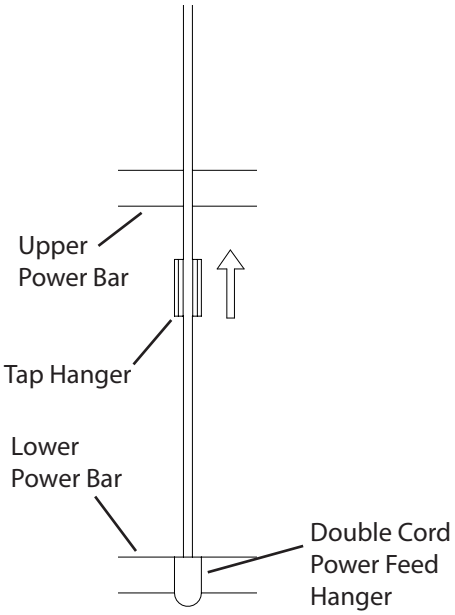

Fig. 3

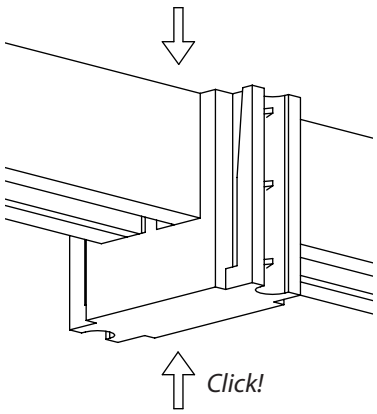

Fig. 4

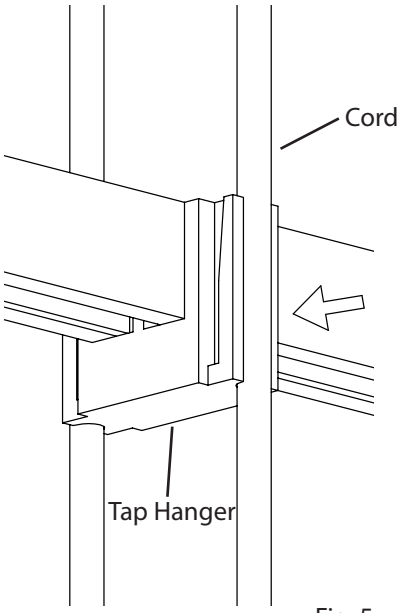

Fig. 5

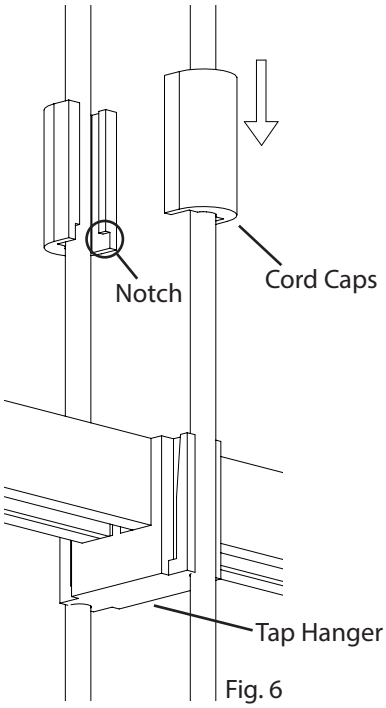

Fig. 6

©2019 SONNEMAN - A WAY OF LIGHT

SONNEMAN
A WAY OF LIGHT

Ceiling Hangers
Assembly Instructions
INSTRUCTIONS D'INSTALLATION

Applies to Component:			
1XB02SB06*x*	**1XB02SB06*x*-ST**	**1XB02RB06*x***	**1XB02SR18*x***
1XB02SB20*x*	**1XB02SB20*x*-ST**	**1XB02RB20*x***	

Ceiling Hanger Assembly:

1. Install the **Mounting Bracket** to the ceiling with **Anchor** (if appropriate) and **Screw**, then screw the **Post** onto the Mounting Bracket (Fig. 1).
2. Pass the **Ceiling Hanger Rod/Cable** through the **Power Bar**, then through the center hole of the **Cover**, making sure the countersunk holes on the Cover are facing up. Attach the **Cover** to the **Hanger** using the two small **Phillips Screws** (Fig. 2).
3. For Hanger with **Stem**: Hand screw the Stem onto the Ceiling Hanger. (Fig. 2)
4. Attaching the **Ceiling Hanger Rod/Cable** into the **Post**:
   a. For Rod Hangers: Cut the **Rod** to the desired length, then insert the **Rod** into the **Post** and tighten the **Set Screw** with the **Allen Key** (Fig. 3).
   b. For Cable Hanger: Insert **Cable** into Post, then adjust to the desired length: to shorten, push the Cable up; to lengthen, push in the **Plunger** while pulling down on the cable, release the Plunger to lock. Cut off the excess cable where it exits the Post (Fig. 2).

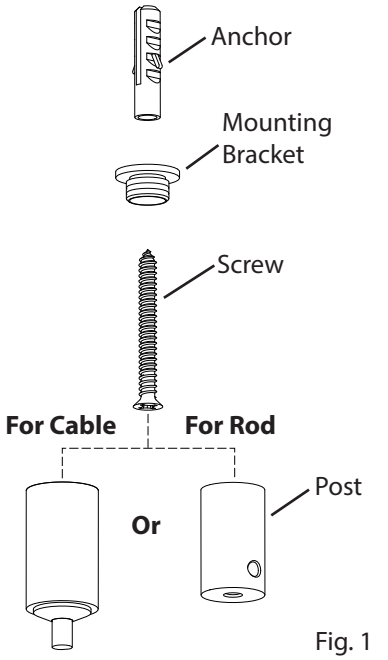

Fig. 1

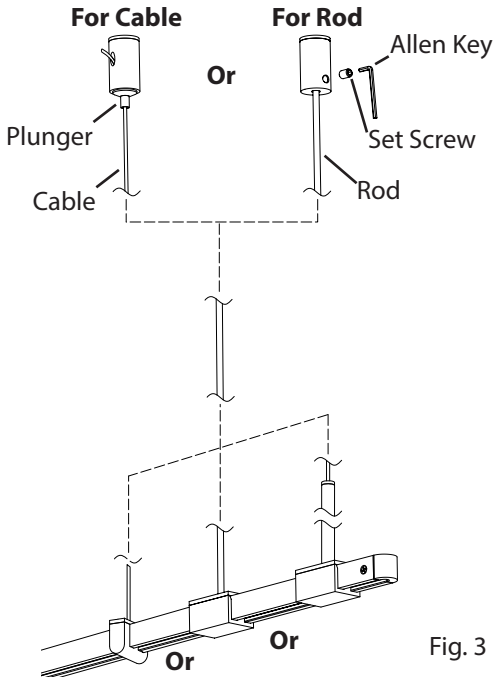

Fig. 3

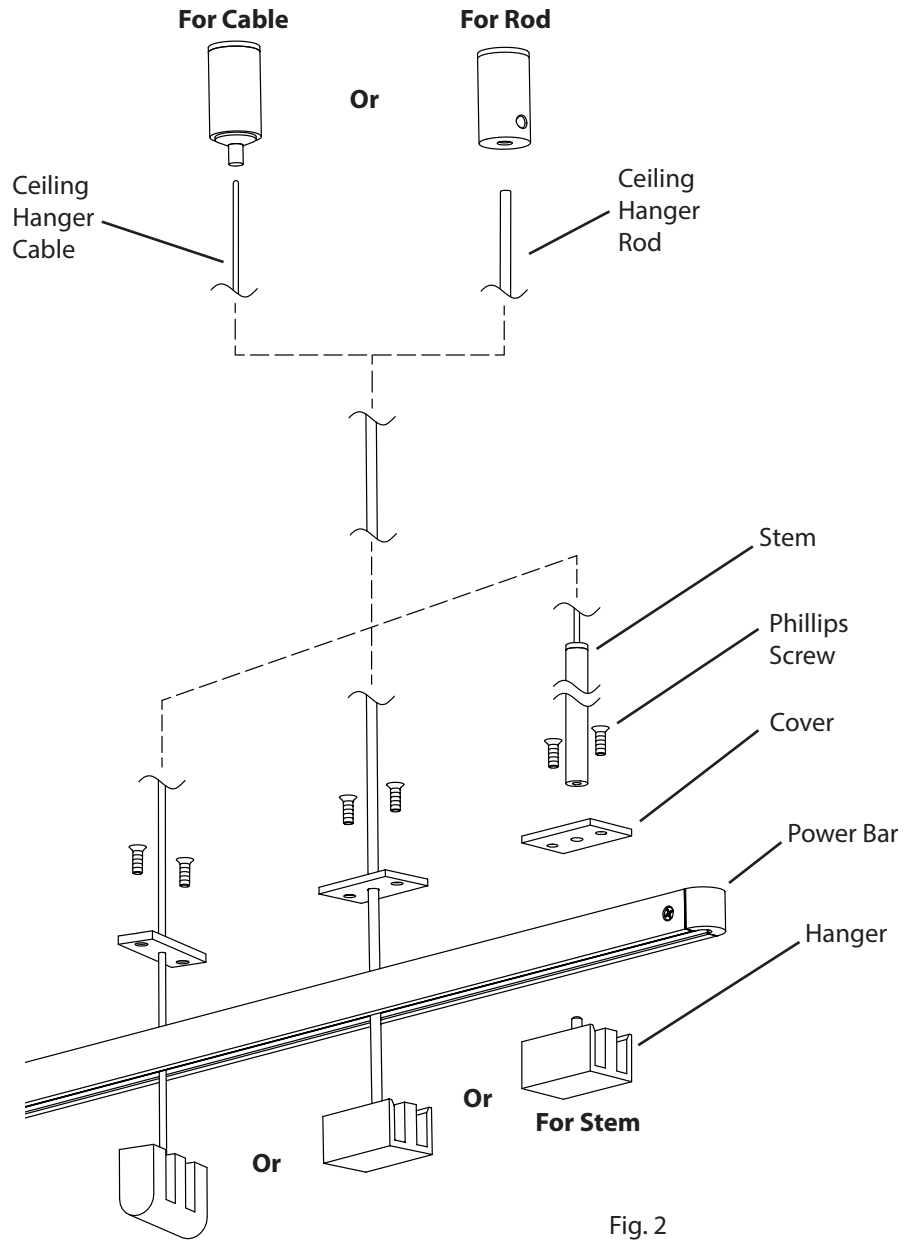

Fig. 2

©2019 SONNEMAN - A WAY OF LIGHT

SONNEMAN
A WAY OF LIGHT

June 10, 2019

Ceiling Hangers
Assembly Instructions
INSTRUCTIONS D'INSTALLATION

Applies to Components:		
1XB02IB06*x*	**1XB02IB06*x*-ST**	**1XB02IR18*x***
1XB02IB20*x*	**1XB02IB20*x*-ST**	

In-Line Ceiling Hanger Assembly:

1. Install the **Mounting Bracket** to the ceiling with **Anchor** (if applicable) and **Screw**, then screw the **Post** onto the Mounting Bracket (Fig. 1).
2. For Hanger with **Stem**: Hand screw the Stem onto the Ceiling Hanger (Fig. 2).
3. Attaching the **Ceiling Hanger Rod/Cable** into the **Post**:
   a. For Rod Hangers: Cut the **Rod** to the desired length, then insert the **Rod** into the **Post** and tighten the **Set Screw** with the **Allen Key** (Fig. 3).
   b. For Cord Hanger: Insert **Cable** into Post, then adjust to the desired length: to shorten, push the Cable up; to lengthen, push in the **Plunger** while pulling down on the cable, release the Plunger to lock. Cut off the excess cable where it exits the Post (Fig. 3).
4. Press down firmly on the top of the **Power Bar**, while pressing up on the bottom of the **Hanger**, until the Power Bar clicks into place. Repeat for adjacent power bar (Fig. 2).

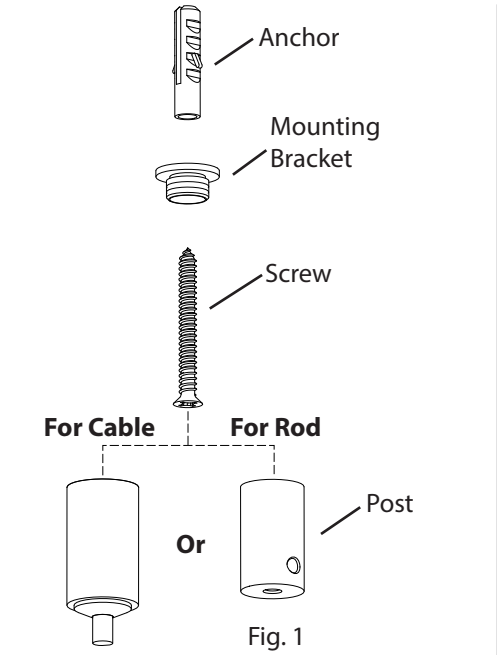

Fig. 1

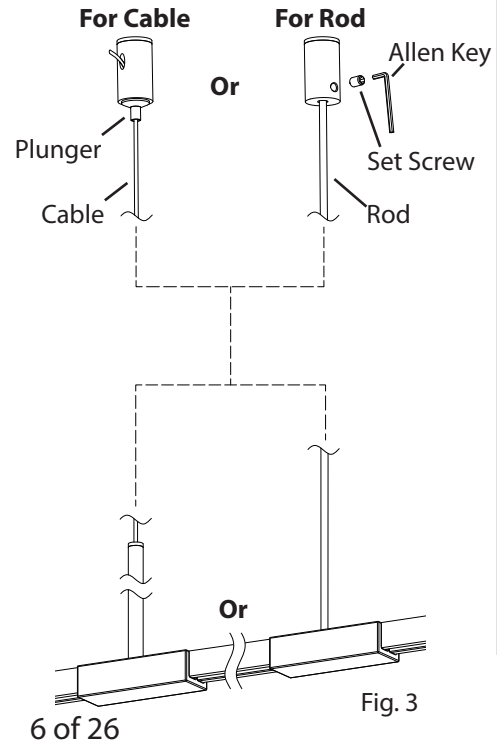

Fig. 3

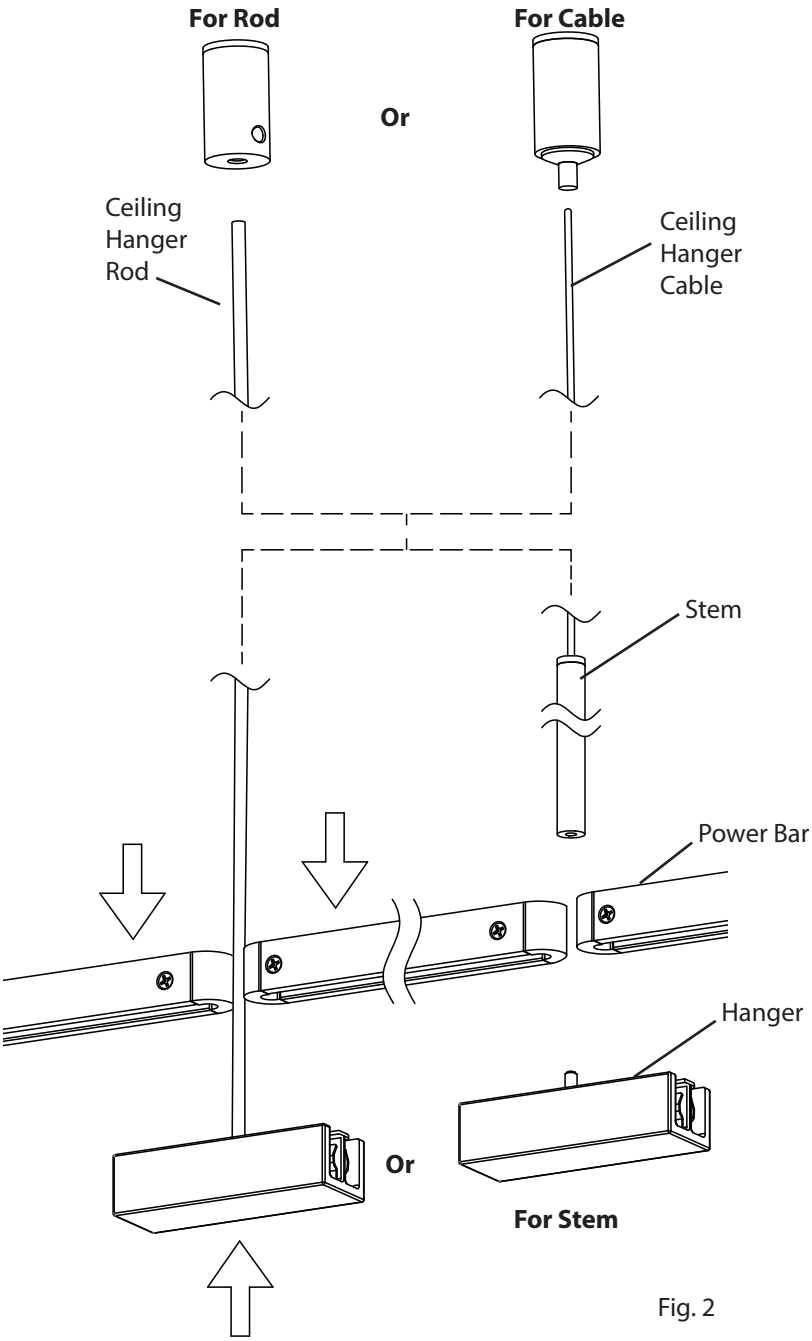

Fig. 2

©2019 SONNEMAN - A WAY OF LIGHT

SONNEMAN
A WAY OF LIGHT

Wall Mount System

Assembly Instructions

INSTRUCTIONS D'INSTALLATION

Applies to Components:
1XB02WL00*x* **1XB02WL01*x***

Wall Flush Mount Support:

1. Install the **Mounting Bracket** to the wall with **Anchor** (if applicable) and **Screw**, align set screw holes with the direction of **Power Bar**, then attach the **Support** onto the Mounting Bracket and tighten the two **Set Screws** with the **Allen Key** (Fig. 1).
2. Remove **Flat Head Screw** and **Support Cap** and align **Power Bar** with **Support** (Fig. 2).
3. Insert **Power Bar** into **Support**. Reattach **Support Cap** with **Flat Head Screw** (Fig. 3). **Note:** Wall Mount Support (1XB02WL00*x*) is to be used in conjunction with Wall Mount Standard Power Feed (1XA08WL01*x*) or Remote (1XA08WL02*x*).

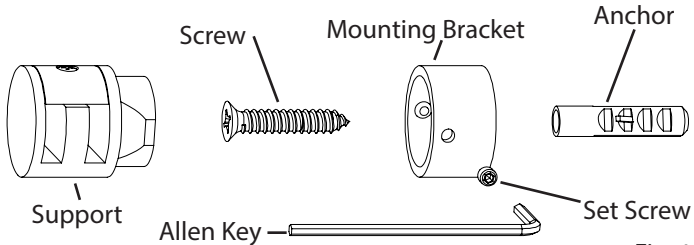

Fig. 1

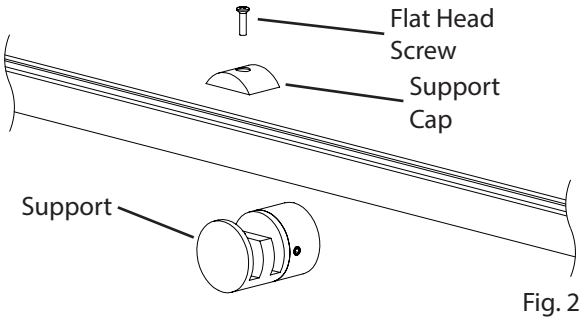

Fig. 2

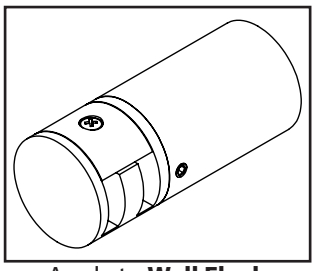

Apply to **Wall Flush Mount Offset Support**

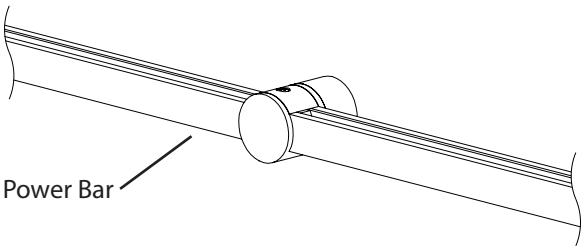

Fig. 3

Wall Mount Perpendicular Power Bar Hanger:

Applies to Components:
1XB03WP00*x*

1. Install the **Mounting Bracket** to the wall with **Anchor** (if applicable) and **Screw**, align set screw holes with the direction of **Power Bar**, then attach the **Support** onto the Mounting Bracket and tighten the two **Set Screws** with the **Allen Key** (Fig. 1).
2. Insert **Power Bars** into **Support**. **Note:** Wall Mount Perpendicular Power Bar Hanger (1XB03WP00*x*) is to be used in conjunction with Wall Flush Mount Support (1XB02WL00*x*), Wall Flush Mount Offset Support (1XB02WL01*x*) (Fig 4), and Wall Flush Mount Standard Power Feed (1XA08WL01*x*) or Remote (1XA08WL02*x*) (Fig 4).

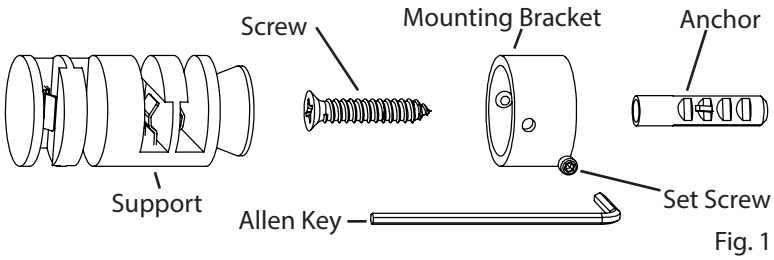

Fig. 1

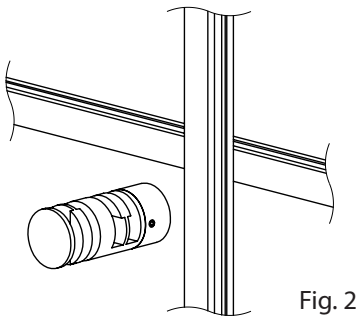

Fig. 2

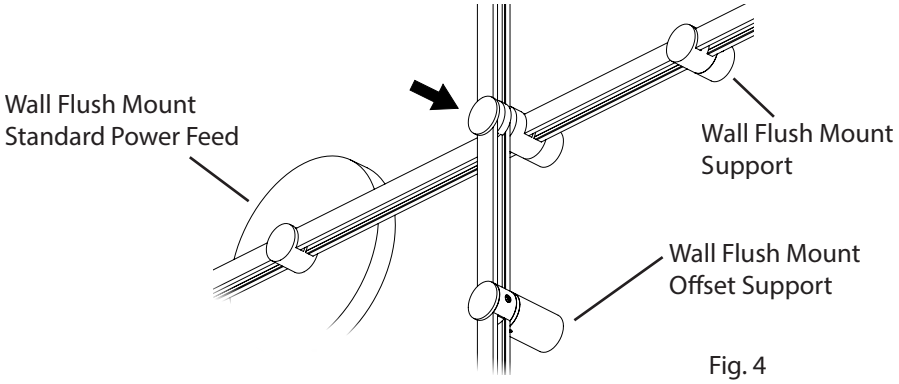

Fig. 4

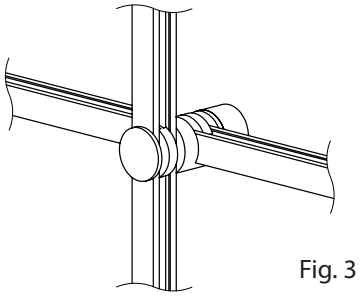

Fig. 3

©2019 SONNEMAN - A WAY OF LIGHT

SONNEMAN
A WAY OF LIGHT

June 10, 2019

Ceiling Mount System

Assembly Instructions

INSTRUCTIONS D'INSTALLATION

Applies to Components:
1XB02CE00*x* **1XB02CE01*x***

Ceiling Flush Mount Support:

1. Install the **Mounting Bracket** to the ceiling with **Anchor** (if applicable) and **Screw**, align set screw holes with the direction of **Power Bar**, then attach the **Support** onto the Mounting Bracket and tighten two **Set Screws** with the **Allen Key** (Fig. 1).
2. Remove **Flat Head Screw** and **Support Cap** and align **Power Bar** with **Support** (Fig. 2).
3. Insert **Power Bar** into **Support**. Reattach **Support Cap** with **Flat Head Screw** (Fig. 3). **Note:** Ceiling Flush Mount Support (1XB02CE00*x*) is to be used in conjunction with Ceiling Mount Standard Power Feed (1XA08CE01*x*).

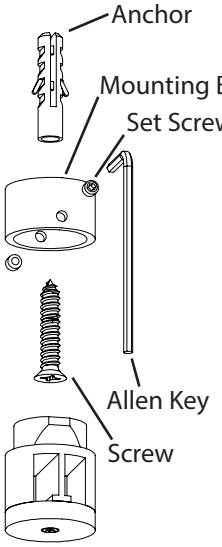

Fig. 1

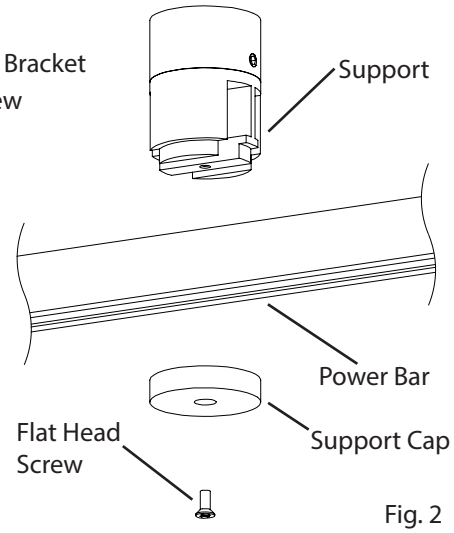

Fig. 2

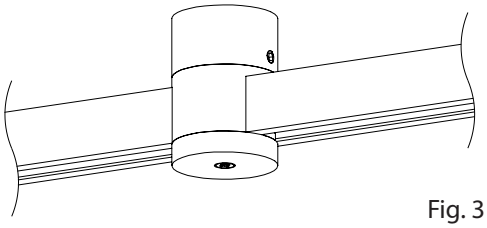
Fig. 3

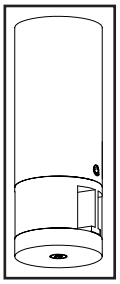
Applies to **Ceiling Flush Mount Offset Support**

Flush Rotational Power Bar Hanger:

Applies to Components:
1XB03RD00*x*

1. Remove **Flat Head Screw** and both **Hanger Caps** (Fig. 1).
2. Align **Power Bars** with **Hanger** (Fig. 2). Press down firmly on the top of the **Top Power Bar** and bottom of **Bottom Power Bar** until the Power Bars clicks into place. Reattach **Hanger Cap** with **Flat Head Screw** (Fig. 3).
3. Insert **Power Bar**, into **Support**. Reattach **Support Cap** with **Flat Head Screw** (Fig. 3).

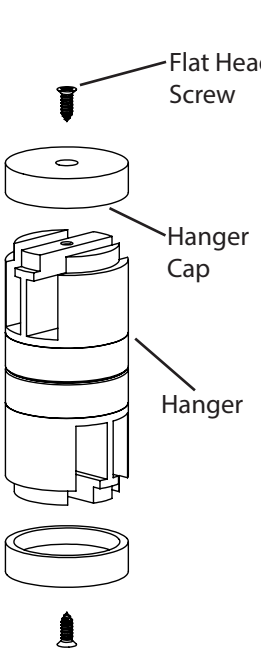

Fig. 1

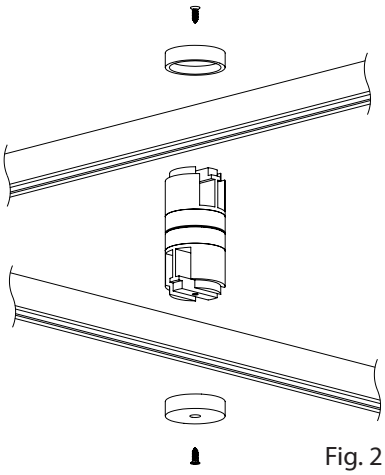
Fig. 2

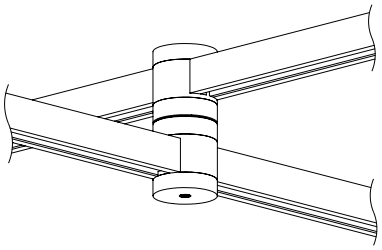
Fig. 3

©2019 SONNEMAN - A WAY OF LIGHT

SONNEMAN
A WAY OF LIGHT

Power Bar Hangers

Assembly Instructions

INSTRUCTIONS D'INSTALLATION

Applies to Components:
1XB03AR*xxx*

Parallel Power Bar Hanger:

1. Pass one end of the **Parallel Power Bar Hanger** over the end of a **Power Bar** (Fig. 1).
2. Press down firmly on the top of the **Power Bar Hanger**, while pressing up on the bottom of the Power Bar, until the Power Bar Hanger clicks into place (Fig. 2).
3. Pass a second **Power Bar** between the rods of the **Power Bar Hanger** (Fig. 3).
4. Press down firmly on the top of the **Power Bar**, while pressing up on the bottom of the **Power Bar Hanger**, until the Power Bar clicks into place (Fig. 4).

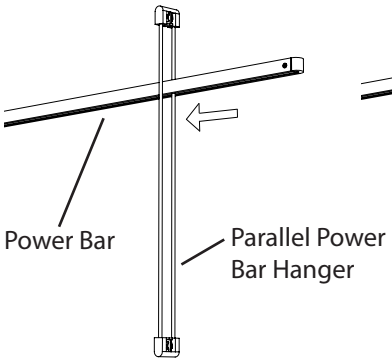

Fig. 1

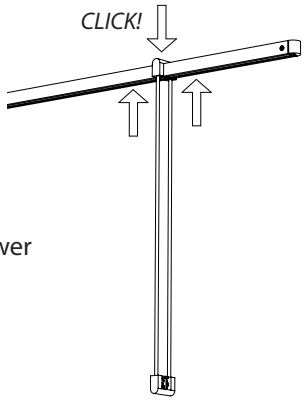

Fig. 2

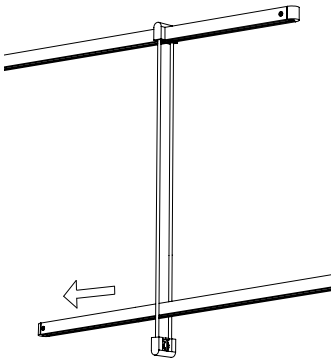

Fig. 3

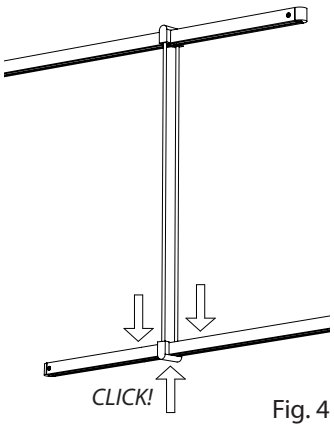

Fig. 4

Perpendicular Power Bar Hanger:

Applies to Components:
1XB03ER18*x*

1. Gently spread apart the **Power Bar** and insert the **Rods** of the **Perpendicular Power Bar Hanger** through the Power Bar (Fig. 1).
2. Tip the **Perpendicular Power Bar Hanger** 45 degrees and insert the copper springs into the center of the **Power Bar** (Fig. 2).
3. Push the **Perpendicular Power Bar Hanger** up while tipping it back up 45 degrees (Fig. 2).
4. Pass top portion of the **Perpendicular Power Bar Hanger** over the end of the **Power Bar** and press down firmly on the top of the **Power Bar Hanger** while pressing up on the bottom of the Power Bar, until the Power Bar Hanger clicks into place (Fig. 3).

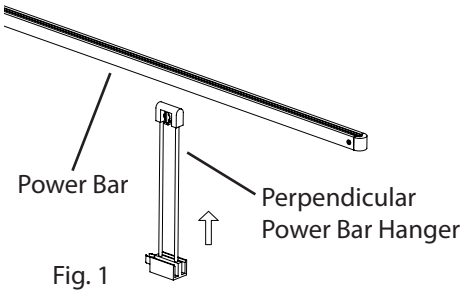

Fig. 1

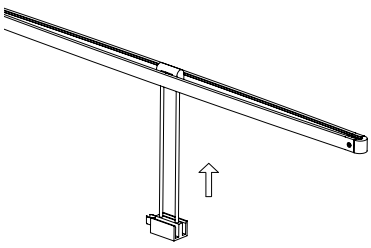

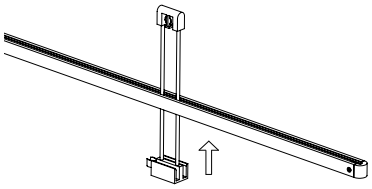

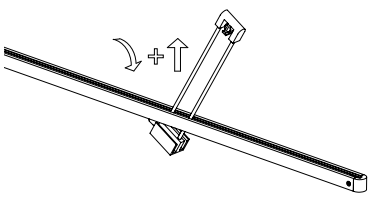

Fig. 2

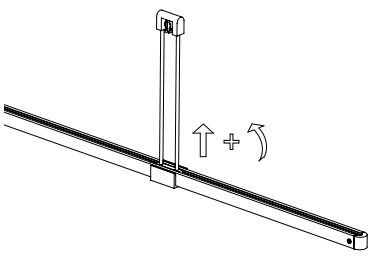

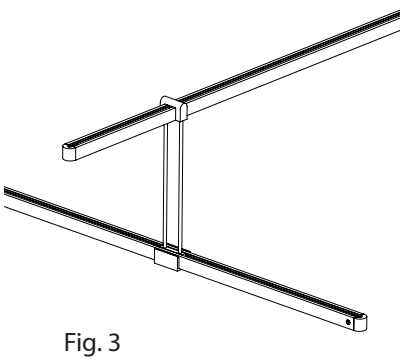

Fig. 3

©2019 SONNEMAN - A WAY OF LIGHT

SONNEMAN
A WAY OF LIGHT

June 10, 2019

Power Bar Hangers

Assembly Instructions

INSTRUCTIONS D'INSTALLATION

Applies to Components:
1XB03PR*xxx*

Perpendicular Power Bar Hanger v2:

1. Press down firmly on the top of the **Power Bar Hanger**, while pressing up on the bottom of the **Power Bar**, until the Power Bar Hanger clicks into place (Fig. 2).
2. Push up on the bottom of the **Power Bar Hanger Cover**, while pressing down on the bottom of the **Power Bar**, until the Power Bar Hanger Cover clicks into place (Fig. 3).
3. Pass top portion of the **Perpendicular Power Bar Hanger** over the end of the **Power Bar** and press down firmly on the top of the **Power Bar Hanger** while pressing up on the bottom of the Power Bar, until the Power Bar Hanger clicks into place (Fig. 3).
4. To remove the **Power Bar Hanger Cover**:
   Spread the **Power Bar Hanger Cover** apart using the index and middle finger of each hand and pull down on the cover while pushing up on the **Power Bars** with the thumbs.

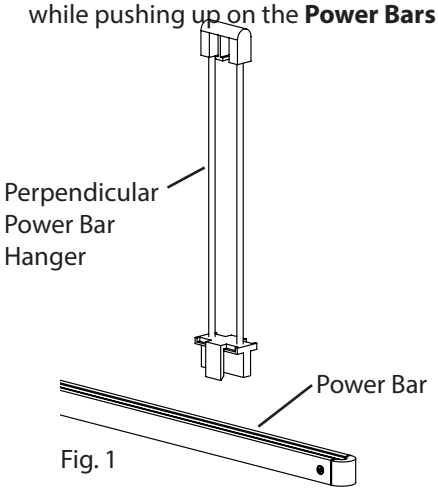

Fig. 1

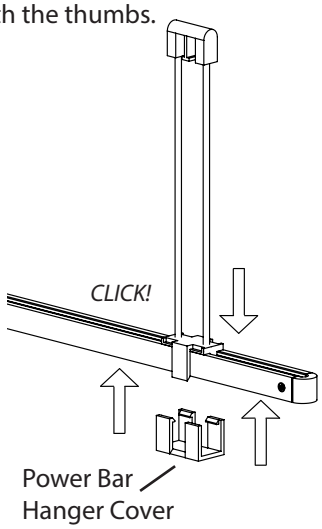

Fig. 2

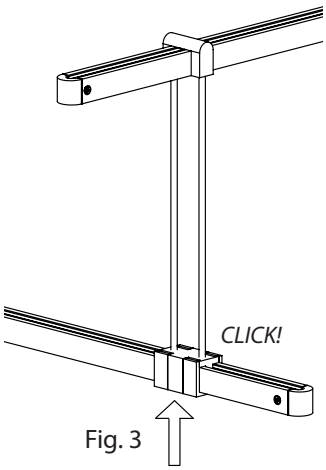

Fig. 3

Applies to Components:
1XB03RD*xxx* **1XB03RS*xxx***

Single and Double Rotational Power Bar Hanger:

1. Press down firmly on the top of the **Power Bar Hanger Hub** while pressing up on the bottom of the **Power Bar**, until the Power Bar Hanger Hub clicks into place (Fig. 1).
2. Insert the **Hanger Clip** through the **Hanger Hub** and press up on the Hanger Clip until Hanger Clip clicks into place (Fig. 2).
3. Press the **Hanger Rod** up against the Hanger Hub and screw in the **Hanger Sleeve**. Be sure that the brass contacts on the Power Bar Hanger Hub are touching those on the Hanger Rod (Fig. 3). NOTE: Do not fully tighten.
4. Rotate **Power Bar** to the desired position and secure by fully tightening the **Hanger Sleeve** (Fig. 4).
5. Repeat steps 1-4 for the second **Power Bar**.

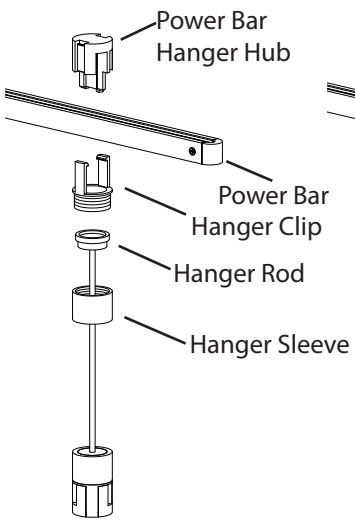

Fig. 1

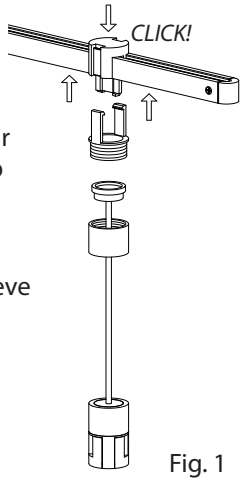

Fig. 2

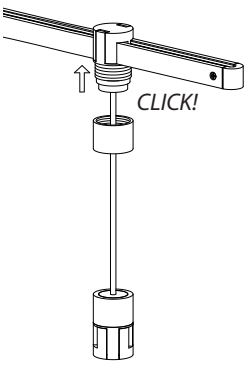

Fig. 3

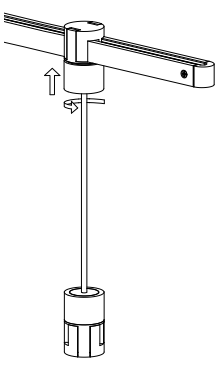
Fig. 4

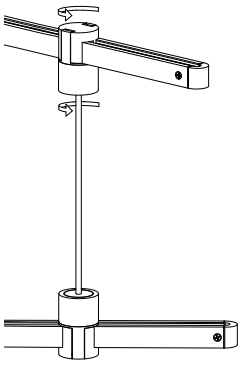

©2019 SONNEMAN - A WAY OF LIGHT

SONNEMAN
A WAY OF LIGHT

Power Bar Hangers

Assembly Instructions

INSTRUCTIONS D'INSTALLATION

Applies to Components:		
1XB02TR06*x*-EN	**1XB03TR16*x*-EX**	**1XZ05000*xx***
1XB02TR06*x*-EX	**1XB02TR20*x*-EN**	
1XB03TR16*x*-EN	**1XB02TR20*x*-EX**	

Truss Hanger System:

1. Where applicable: Install the **Mounting Bracket** to the ceiling with **Anchor** (if applicable) and **Screw**, then screw the **Post** onto the Mounting Bracket (Fig. 1).
2. Insert Extension or End **Arm** into the remaining slot of the **Bracket** and secure it with the provided **Arm Flat Head Screw** (Fig. 2).
3. Where applicable: Insert the **Cable** into the **Post** and adjust to the desired length: to shorten, push the Cable up; to lengthen, push in the **Plunger** while pulling down on the Cable, release the Plunger to lock. Cut off the excess Cable where it exits the Post (Fig. 2).
4. Remove **Cover Flat Head Screw** and **Bracket Cover** and align **Power Bar** with the **Bracket** (Fig. 3).
5. Insert **Power Bar** onto the **Bracket** and reattach the **Bracket Cover** with **Flat Head Screw** (Fig. 4).
6. Repeat step 3 and 4 for each **Bracket**.

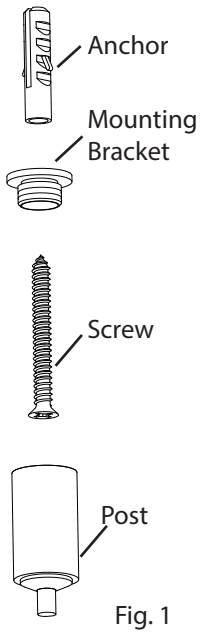

Fig. 1

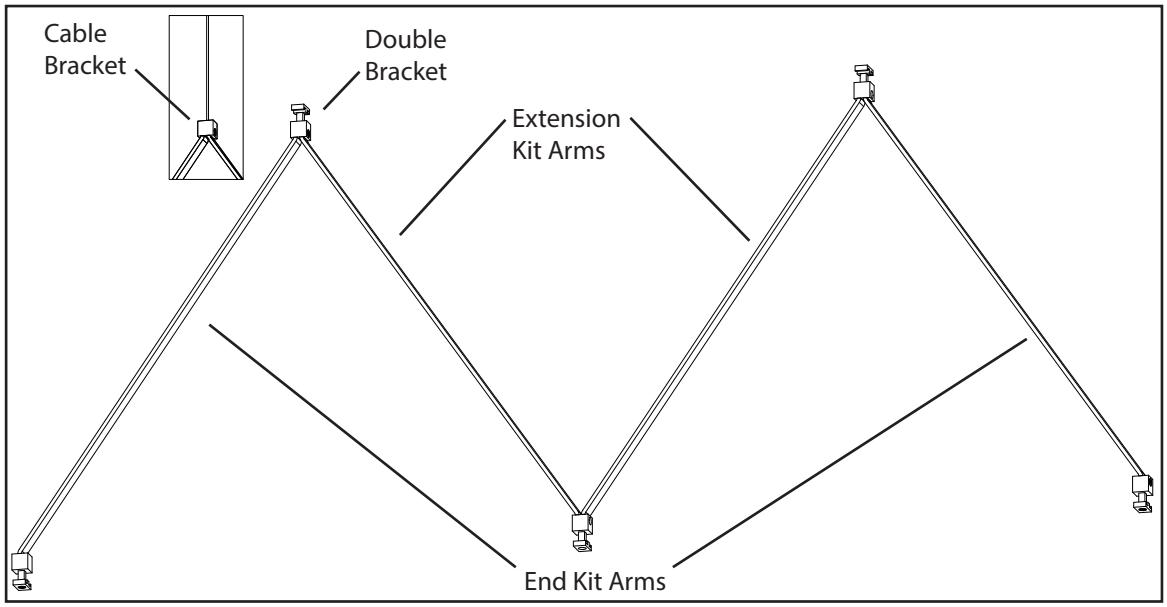

Sown in use Extension Kit with End Kit

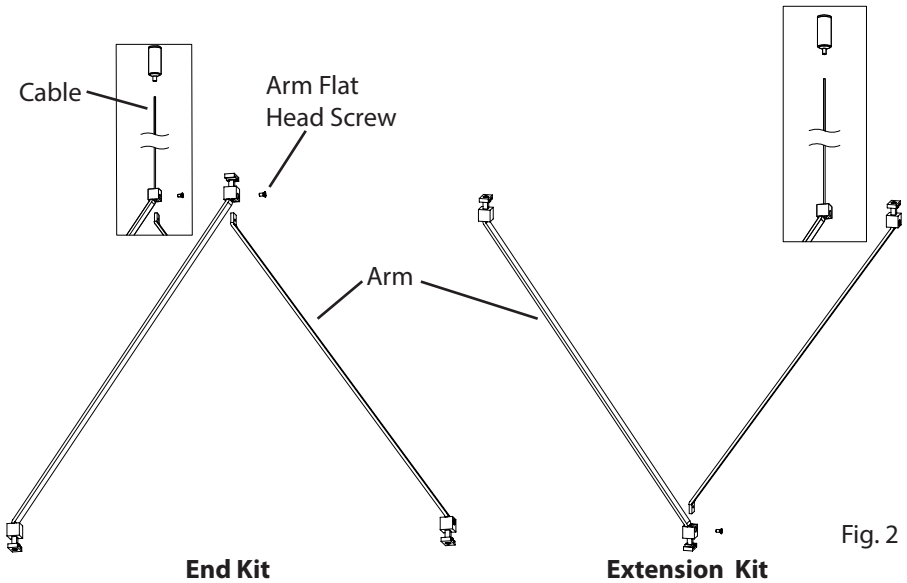

End Kit **Extension Kit**

Fig. 2

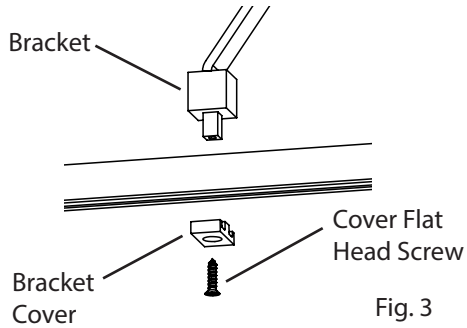

Fig. 3

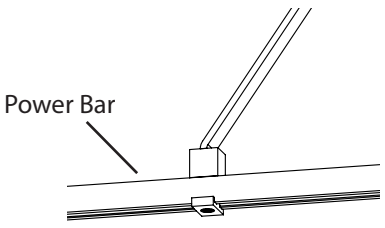

Fig. 4

©2019 SONNEMAN - A WAY OF LIGHT

SONNEMAN
A WAY OF LIGHT

June 10, 2019

Power Bar Hangers

Assembly Instructions

INSTRUCTIONS D'INSTALLATION

Flush Perpendicular Power Bar Hanger:

Applies to Components:
1XB03PR00*x*

1. Remove **Flat Head Screws** and both **Hanger Caps** (Fig. 1).
2. Align **Power Bars** with **Hanger** (Fig. 2). Press down firmly on the top of the **Top Power Bar** and bottom of **Bottom Power Bar** until the Power Bars clicks into place. Reattach **Hanger Cap** with **Flat Head Screw** (Fig. 3).

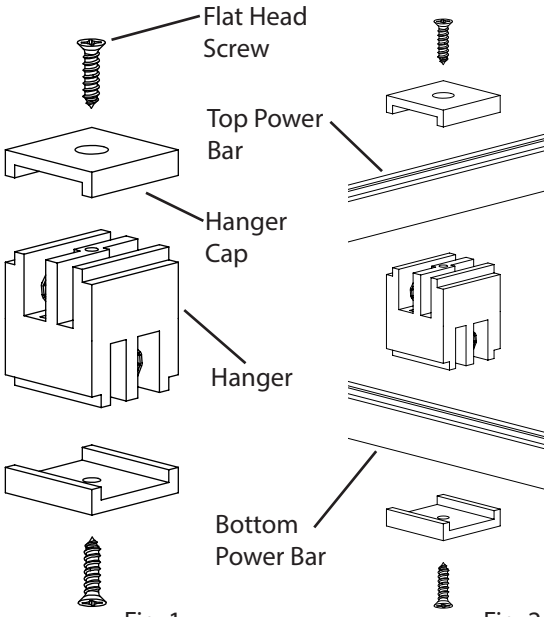

Fig. 1

Fig. 2

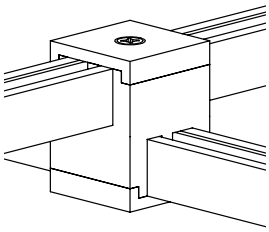

Fig. 3

In-Line Power Bar Connector:

Applies to Components:
1XB03IB00*x*

1. Align **In-Line Connector** with **Power Bar** (Fig. 1) and press down firmly on the top of the Power Bars, while pressing up on the bottom of the Connector until the Power Bars clicks into place (Fig. 2).

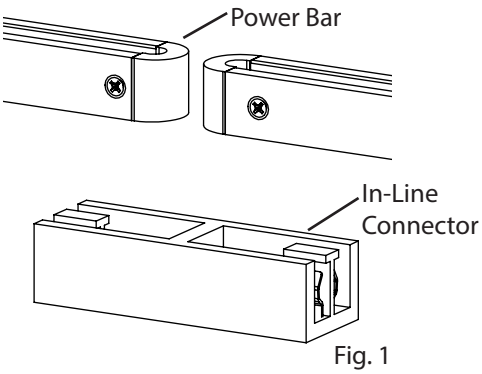

Fig. 1

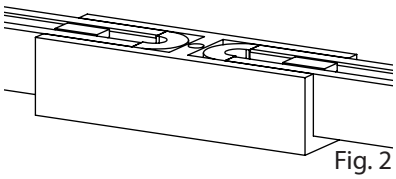

Fig. 2

Double Cord Power Bar Hanger:

Applies to Components:
1XB03DC16*x*

NOTE: Each Single Cord Power Feed Hanger only carries half of the electrical circuit, and must be used in pairs. To avoid short-circuiting the system, the spring contacts must point in different directions (Fig 1).

1. Align **Hanger** with **Power Bars** (Fig. 2) and press down firmly on the top (or bottom) of the Power Bar, while pressing up (or down) on the bottom of the Hanger, until the Power Bar clicks into place (Fig. 3).

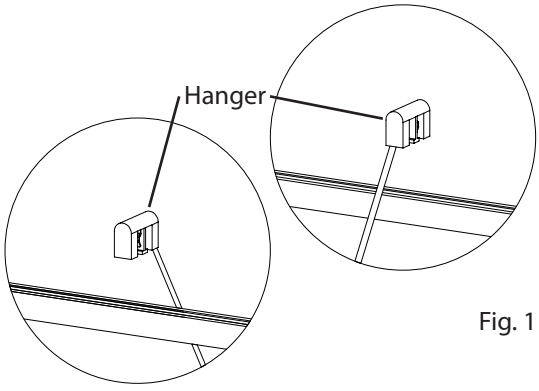

Fig. 1

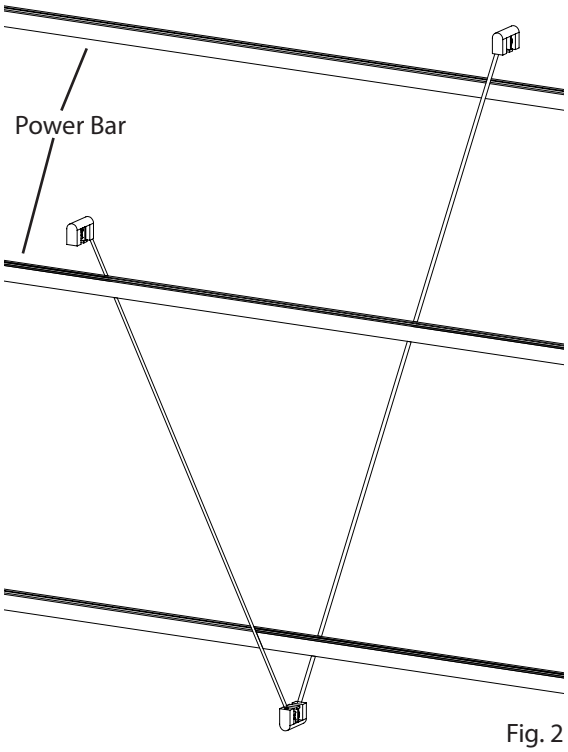

Fig. 2

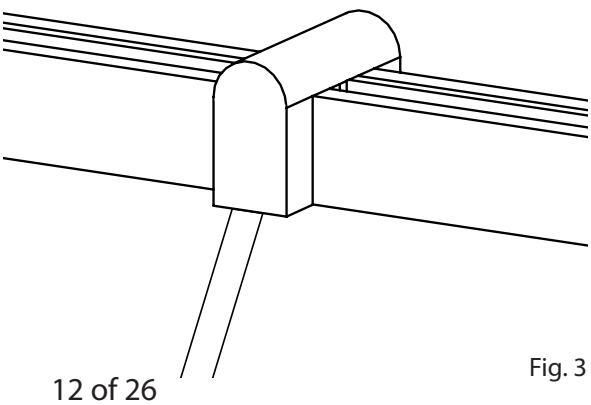

Fig. 3

©2019 SONNEMAN - A WAY OF LIGHT

SONNEMAN
A WAY OF LIGHT

Luminaires and Luminaire Hangers

Assembly Instructions

INSTRUCTIONS D'INSTALLATION

Applies to Components:

1XDXXRP*xxx*	**1XB04DR*xxx***	**1XB04RD*xxx***
1XB04AR*xxx*	**1XB04DR16*x*-RG**	

Connecting an RP*xx* Luminaire to an AR*xx*, RP*xx, and DRxx* Double Luminaire Hanger (Fig. 1):

1. Gently insert the two **Luminaire Hanger Rods** into the holes on the top of the **Luminaire**.
2. Rotate the **Luminaire** or **Luminaire Hanger** 90 degrees.
3. Push the **Luminaire Hanger** rods into the **Luminaire** until the copper on the ends of the rods is no longer visible.
4. Rotate the **Luminaire** or **Luminaire Hanger** back 90 degrees to lock.

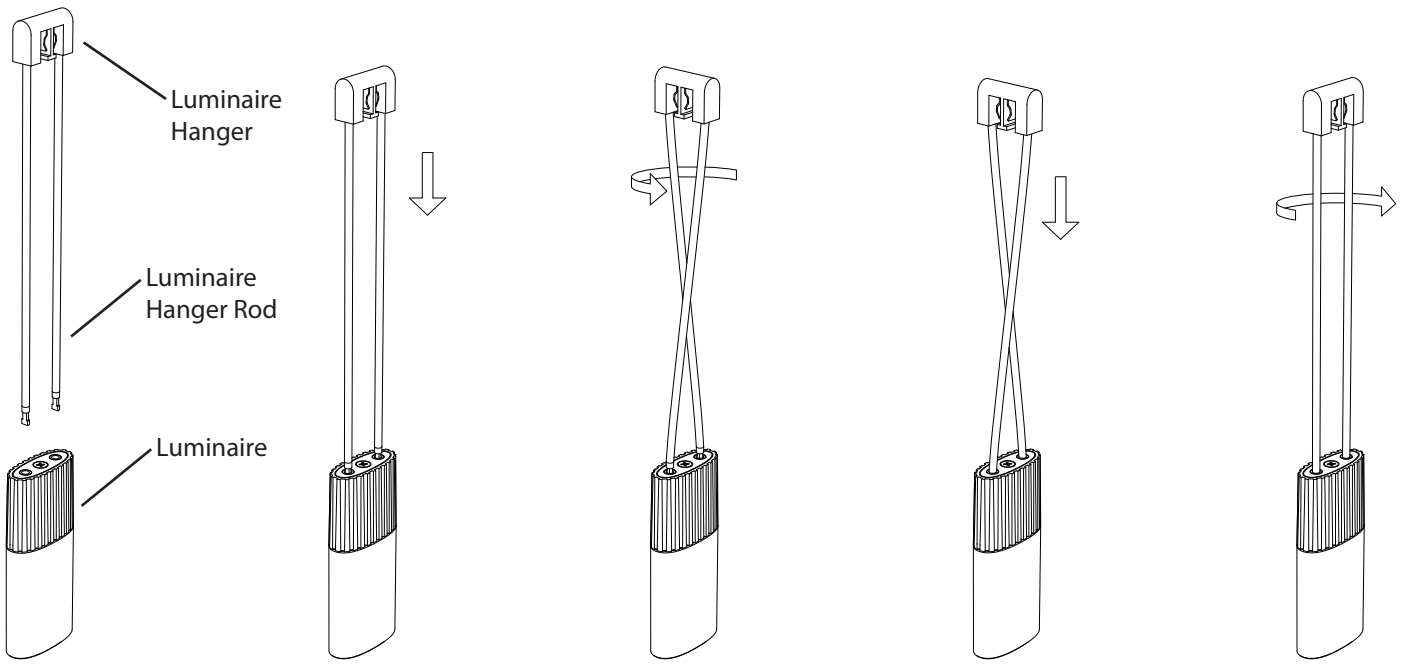

Fig. 1

Connecting a Double Rod Luminaire Hanger to a Power Bar:

1. Place the **Luminaire Hanger** over the **Power Bar** (Fig. 2).
2. Press down firmly on the top of the **Luminaire Hanger**, while pressing up on the bottom of the **Power Bar**, until the Luminaire Hanger clicks into place (Fig 3).
3. To remove, tip the **Luminaire Hanger** in the direction of the **Power Bar**, then lift the Luminaire Hanger off the Power Bar.

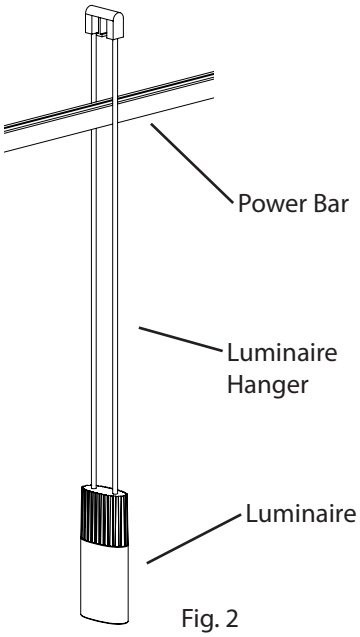

Fig. 2

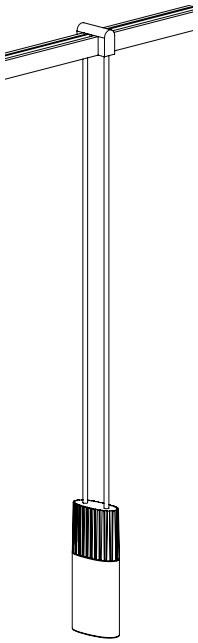

Fig. 3

©2019 SONNEMAN - A WAY OF LIGHT

SONNEMAN
A WAY OF LIGHT

June 10, 2019

Luminaires and Luminaire Hangers

Assembly Instructions

INSTRUCTIONS D'INSTALLATION

Applies to Components:
1XB04AR*xxx*

Connecting a Parallel Luminaire Hanger to a Power Bar:

1. Place the **Parallel Luminaire Hanger** under the **Power Bar.**
2. Press up firmly on the bottom of the **Parallel Luminaire Hanger**, while pressing down on the top of the **Power Bar**, until the Parallel Luminaire Hanger clicks into place (Fig. 1).
3. To remove, tip the **Parallel Luminaire Hanger** in the direction of the **Power Bar** to release the **Snap Hooks**, then pull the Parallel Luminaire Hanger off the Power Bar (Fig. 3).

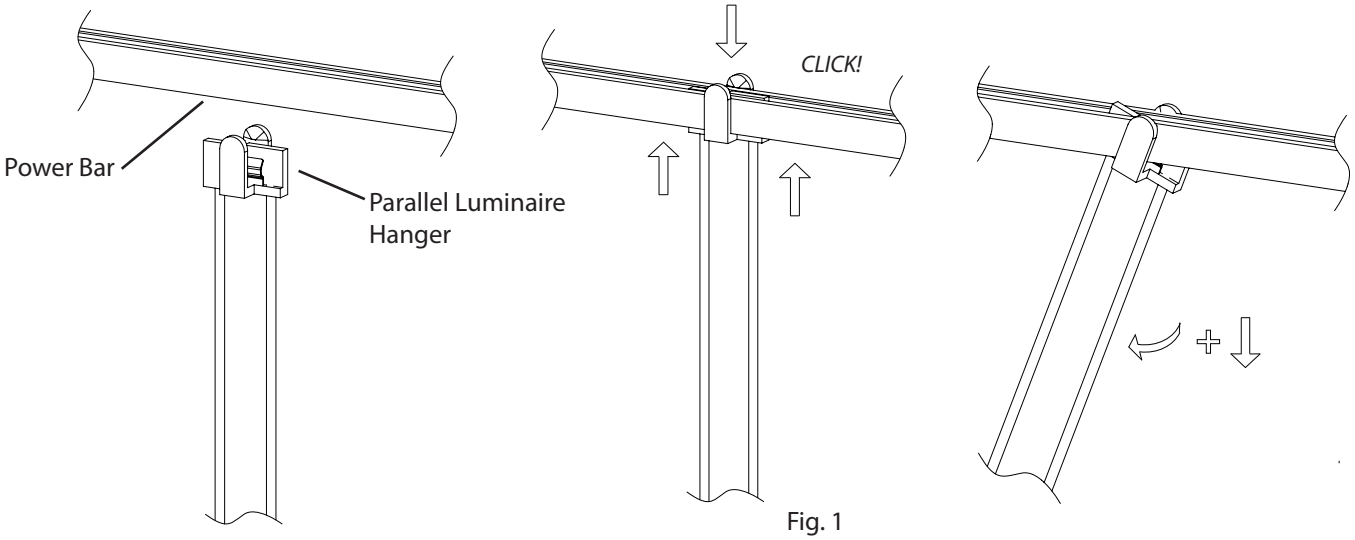

Fig. 1

Applies to Components:
1XB04RD*xxx* **1XDXXRH07*x***

Connecting a Rotational Luminaire Hanger or Light Guide Disk Luminaire to a Power Bar:

1. Place the **Rotational Luminaire Hanger Hub** over the **Power Bar**.
2. Press down firmly on top of **Hub**, while pressing up on the bottom of the **Power Bar**, until the Hub clicks into place (Fig. 2).
3. Press the **Hanger Rod** up against the Hanger Hub and screw in the **Hanger Cap.** Be sure the brass contacts on the Hanger Hub are touching those on the Hanger Rod (Fig. 3). **NOTE:** Do not fully tighten.
4. Rotate the **Luminaire** to the desired position and secure by fully tightening the **Hanger Cap** (Fig. 4).

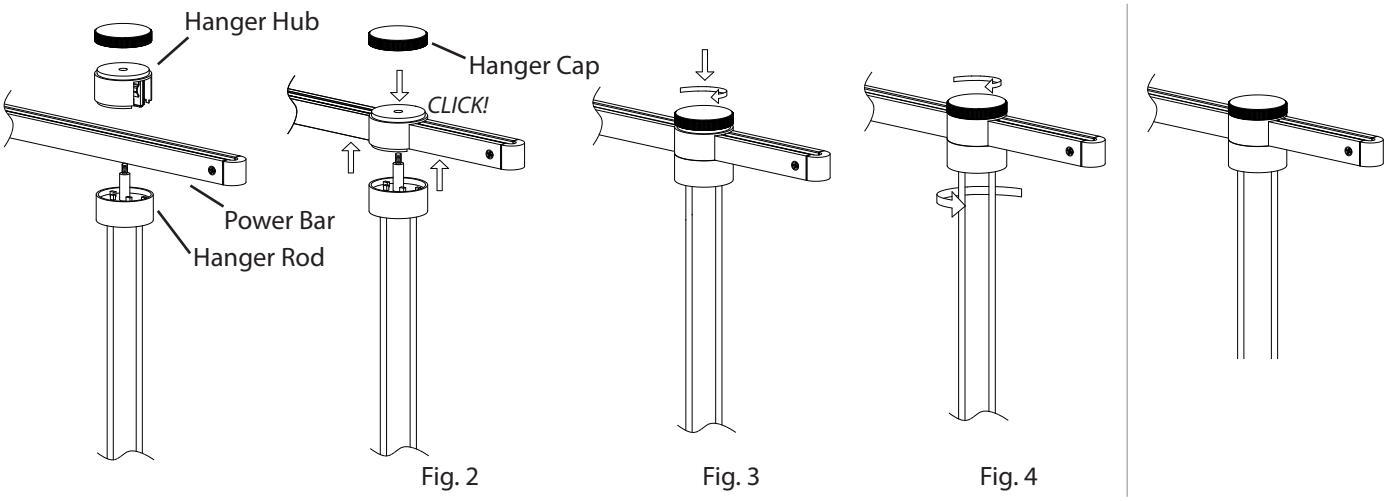

Fig. 2 Fig. 3 Fig. 4

©2019 SONNEMAN - A WAY OF LIGHT

June 10, 2019

SONNEMAN
A WAY OF LIGHT

Luminaires and Luminaire Hangers

Assembly Instructions

INSTRUCTIONS D'INSTALLATION

Calla:

Applies to Components:
1XDXXCL14*x*-XX
1XDXXCL16*x*-XX
1XZ990007*x*
1XZ990010*x*

1. Curl the **Petal** into a conical shape and align the two outer holes with each other (1).
2. Align **Petal** with the fixture **Branches** (2).
3. Secure **Petals** to **Branches** by hand screwing the two **Pins** onto the fixture for each Branch (3)

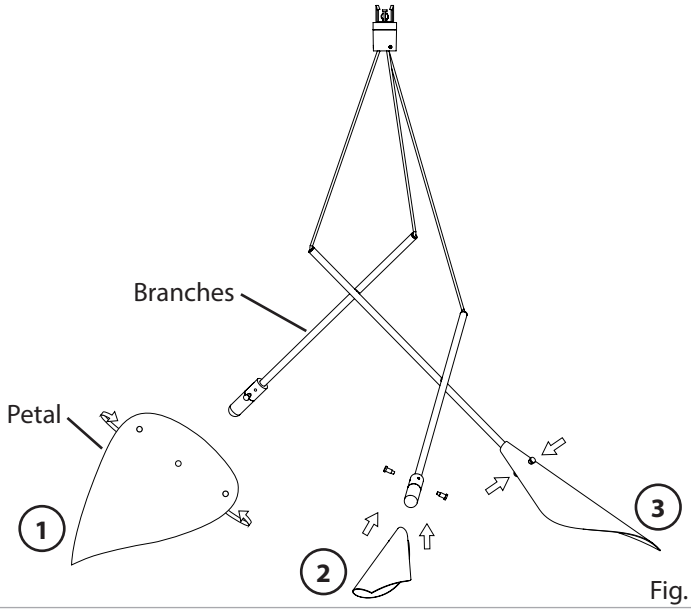

Fig. 2

Glass Cluster Luminaires:

Applies to Components:
1XDXXCL13*x*

1. Place the **Triangle Spacer** in between the **Cables** of the fixture (Fig. 3). Snap the pendent Cables into the Spacer at three locations (Fig. 4). **Note:** Make sure **Glass Luminaires** are screwed on tightly.

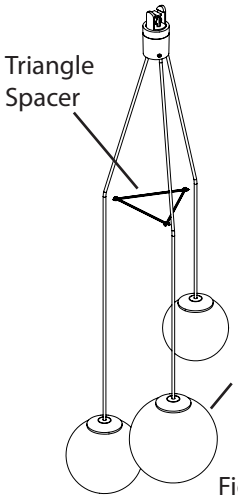

Fig. 3

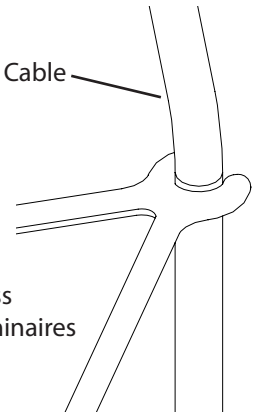

Fig. 4

Leaf, Calla, Branches, Glass Cluster, V-Cord, and Monoline Luminaires:

Applies to Components:
1XDXXCL*xxx-xx*
1XDXXVC*xxx-xx*

1. Align **Hanger** with **Power Bar** (Fig. 1) and press down firmly on the top of the Power Bar, while pressing up on the bottom of the Hanger, until the Power Bar clicks into place. (Fig. 2)
2. To remove, tilt hanger then pull down from **Power Bar** (Fig. 3).

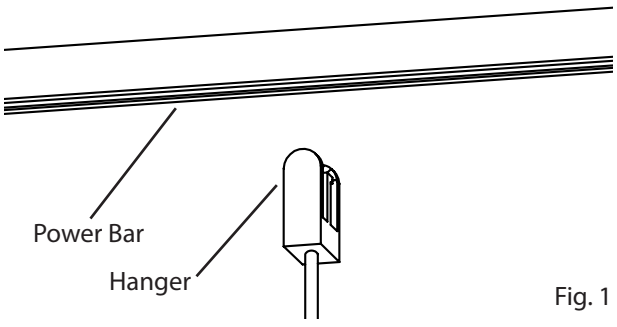

Fig. 1

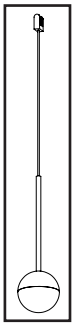

Monoline Luminaires

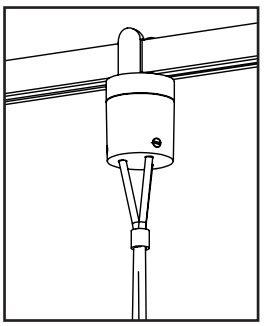

Applies to three cord hangers:
Leaf, Calla, Branches, and Glass Cluster

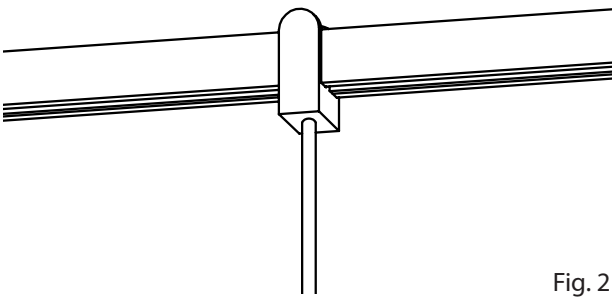

Fig. 2

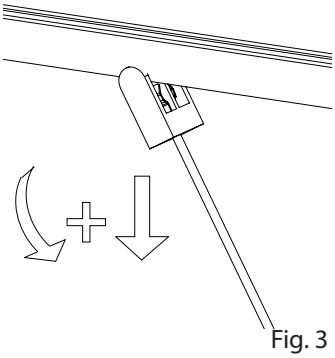

Fig. 3

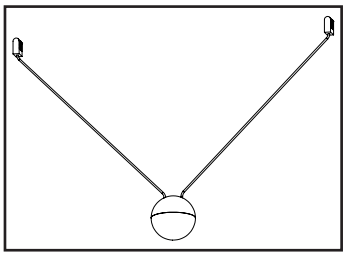

V-Cord Luminaires

©2019 SONNEMAN - A WAY OF LIGHT

SONNEMAN
A WAY OF LIGHT

June 10, 2019

Luminaires and Luminaire Hangers

Assembly Instructions

INSTRUCTIONS D'INSTALLATION

Applies to Components:
1XB04CL09*x* **1XB04CL18*x***

Connecting a Monoline™ Luminaire Hanger to a Power Bar:

1. Place the **Monoline™ Luminaire Hanger** under the **Power Bar**.
2. Press up firmly on both sides the bottom of the **Monoline™ Luminaire Hanger**, while pressing down on the top of the **Power Bar**, until the Luminaire Hanger clicks into place (Fig. 1).
3. Press down firmly on top of the **Luminaire Hanger Cap**, while pressing up on the **Luminaire Hanger**, until the Luminaire Hanger Cap clicks into place (Fig. 2).
4. To remove the **Monoline™ Luminaire Hanger Cover**:
   Spread the Monoline™ Luminaire Hanger Cover apart using the thumbs and press up on the cover, while pressing down on the **Power Bar** with the index and middle fingers. Tip the **Monoline™ Luminaire Hanger** in the direction of the Power Bar and press down on the Hanger, while pressing up on the Power Bar (Fig. 3).

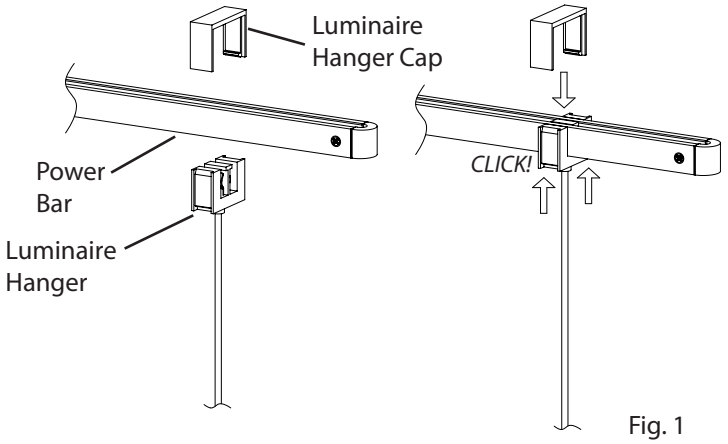

Fig. 1

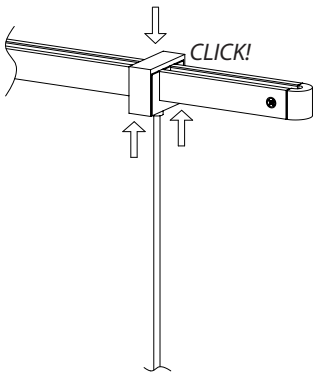

Fig. 2

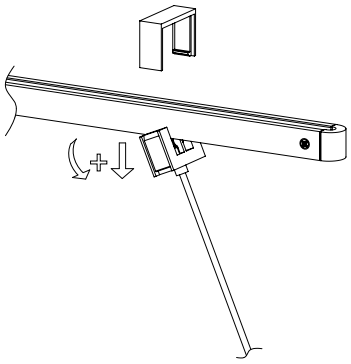
Fig. 3

Applies to Components:
1XDXXCL01*x* **1XDXXCL03*x***
1XDXXCL02*x*

Connecting a Monoline™ Luminaire to a Monoline™ Pendant Cordset:

1. Install the included **G4 Bulb**. (Fig. 4)
2. Raise the **Glass** and align the holes in the glass to the holes in the **Pendant Cordset** (Fig. 5). Secure the glass by inserting the **Threaded Pins** through the holes in the glass and screwing the pins into the **Pendant Cordset** (Fig. 6).

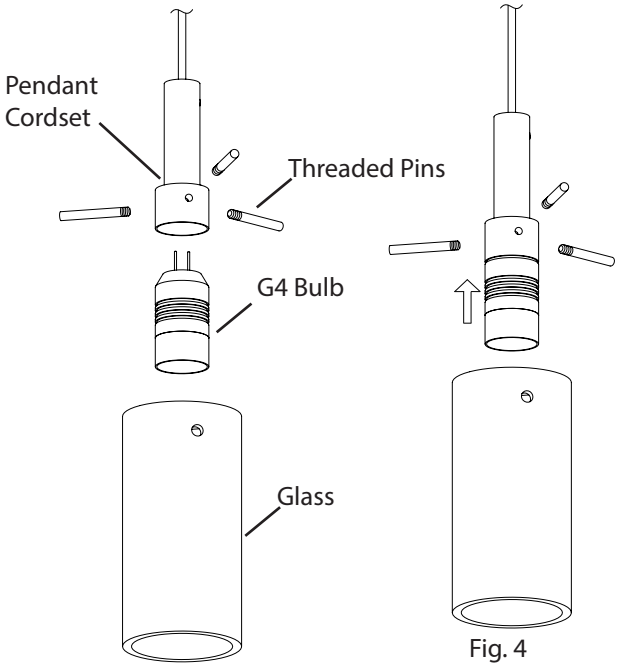

Fig. 4

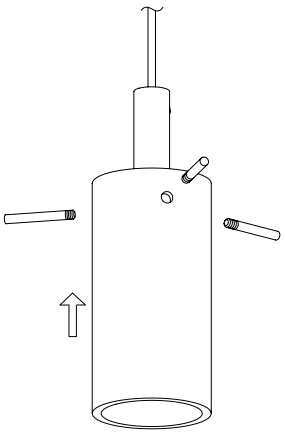
Fig. 5

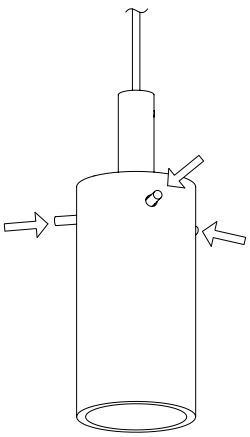
Fig. 6

©2019 SONNEMAN - A WAY OF LIGHT

SONNEMAN
A WAY OF LIGHT

Luminaires and Luminaire Hangers

Assembly Instructions

INSTRUCTIONS D'INSTALLATION

Applies to Component:
1XZ990001*x*

Connecting a Luminaire Hanger Endcap to a Luminaire Hanger:

1. Gently insert the two Luminaire Hanger **Rods** into the holes on the top of the Luminaire Hanger **Endcap** (Fig. 1).
2. Rotate the **Endcap** or Luminaire **Hanger** 90 degrees (Fig. 2).
3. Push the Luminaire **Hanger Rods** into the **Endcap** until the copper on the ends of the Rods is no longer visible (Fig. 3).
4. Rotate the **Endcap** or Luminaire **Hanger** back 90 degrees (Fig. 4).
5. Pull the **Endcap** down to lock the Endcap (Fig. 5).

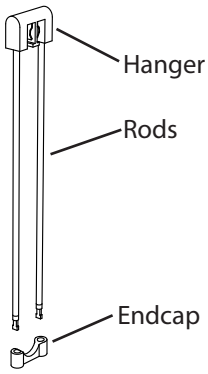

Fig. 1

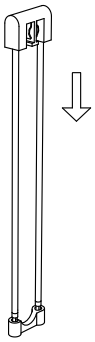
Fig. 2

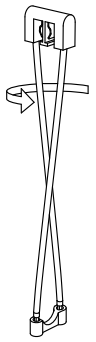
Fig. 3

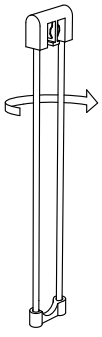
Fig. 4

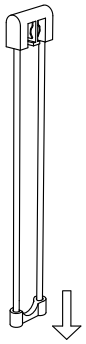
Fig. 5

Applies to Component:
1XDXXLL01*x*

Connecting a Ladder Light onto a Luminaire Hanger:

NOTE: The Luminaire Hanger **Endcap** or a **Luminaire** must be installed before connecting a **Ladder Light** onto a Luminaire **Hanger**.

1. Gently press both sides of the **Ladder Light** onto the Luminaire **Hanger** until the Ladder Light softly clicks into place (Fig. 6).
2. Confirm the desired position of the **Ladder Light** on the **Hanger**, and adjust the position if necessary.
   CAUTION! The next step will put a set of small score lines through the paint on the **Hanger Rods**.
3. Place the index and middle fingers of each hand on the **Hanger Rods** on either side of the **Ladder Light** and press firmly on both sides of the Ladder Light with the thumbs until the Ladder Light fully clicks into place (Fig. 7).

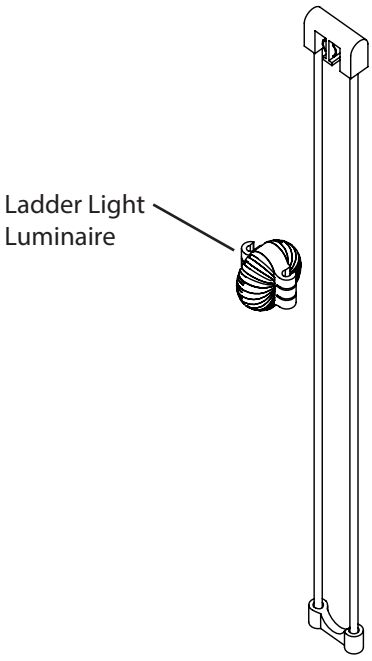

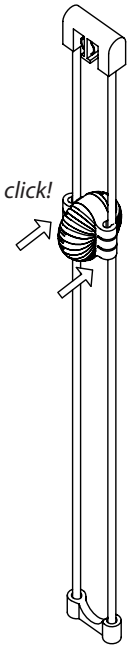

Fig. 6

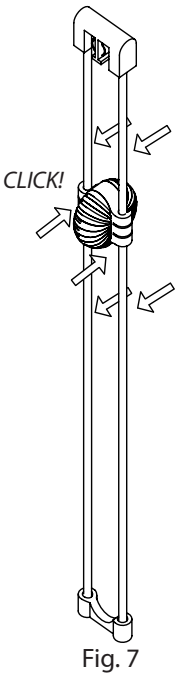

Fig. 7

©2019 SONNEMAN - A WAY OF LIGHT

SONNEMAN
A WAY OF LIGHT

June 10, 2019

Luminaires and Luminaire Hangers

Assembly Instructions

INSTRUCTIONS D'INSTALLATION

Applies to Components:	
1XDXXLB12*x*	**1XDXXLB36*x***
1XDXXLB24*x*	**1XZ990005*x***

Connecting a Light Bar onto a Power Bar:

1. Place the **Light Bar** on the **Power Bar**.
2. Press down firmly on the top of both ends of the **Light Bar**, while pressing up on the bottom of the **Power Bar**, until the Light Bar clicks into place (Fig. 1).

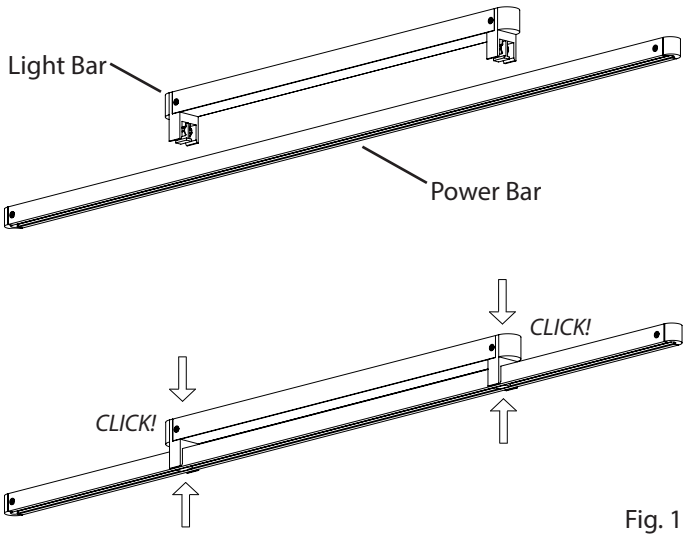

Fig. 1

Removing a Light Bar from a Power Bar:

1. Place the Light Bar **Removal Tool** underneath the end of the **Light Bar** (Fig. 2).
2. Press down firmly on the edge of the **Tool** to separate one side of the **Light Bar** from the **Power Bar** (Fig. 3).
3. Repeat steps 1-2 to separate other side of the **Light Bar**.
4. Lift the **Light Bar** off the **Power Bar** (Fig. 4).

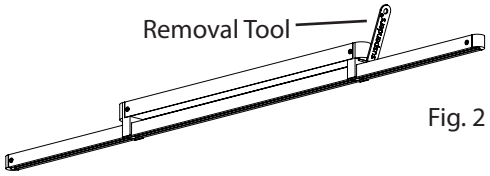

Fig. 2

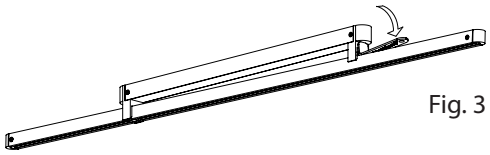

Fig. 3

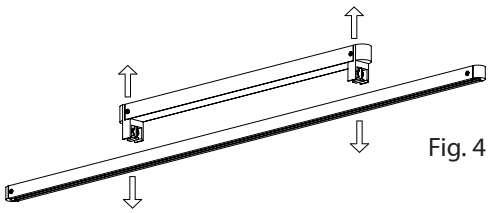

Fig. 4

Suspended Light Bars:

Applies to Components:	
1XB04LB06*x*	**1XB04LB18*x***
1XB04LB12*x*	**1XDXXLB*xxx*-S**

1. Align **Hanger Subassemblies** with the **Light Bar**. Make sure the screw holes of the Hanger Subassembly align with the Light Bar (Fig. 1). **Note: One hanger subassembly has conductors (live) that will engage with light bar once attached; the other does not (dead).**
2. Insert **Hanger Subassembly** into **Light Bar** and secure with **Flat Head Screws** (Fig 2).
3. Align **Hanger** with **Power Bar** (Fig. 3) and press down firmly on the top of the Power Bar, while pressing up on the bottom of the Hanger, until the Power Bar clicks into place (Fig. 4).
4. Adjust the leveling of the **Luminaire** by loosening the **Set Screw** on the **Dead Hanger Subassembly** and lengthening or Shortening the cord (Fig. 5).

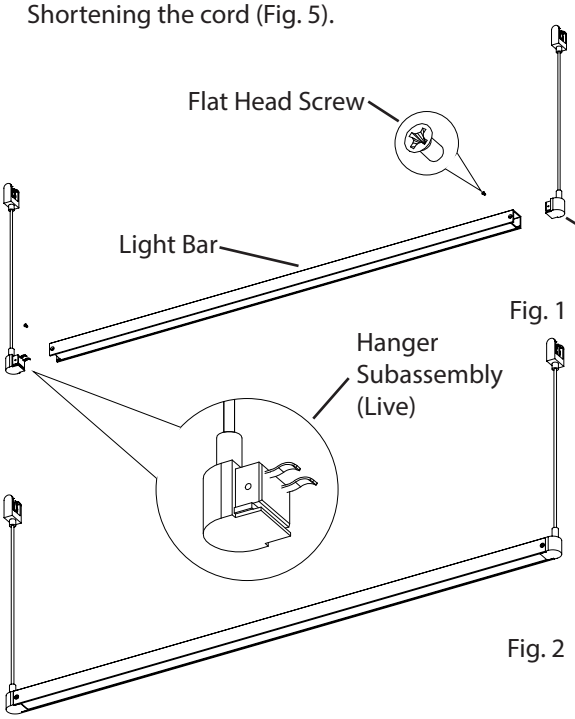

Fig. 2

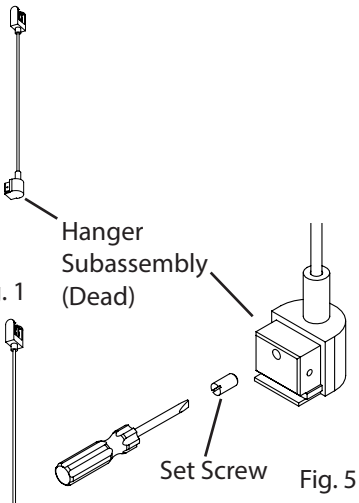

Fig. 5

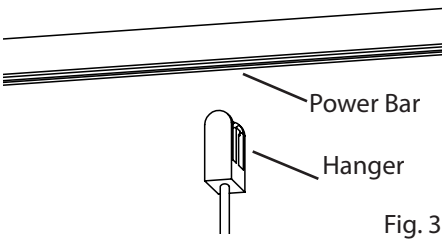

Fig. 3

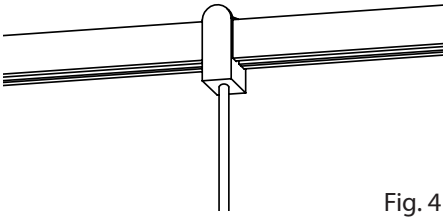

Fig. 4

©2019 SONNEMAN - A WAY OF LIGHT

SONNEMAN
A WAY OF LIGHT

Luminaires and Luminaire Hangers

Assembly Instructions

INSTRUCTIONS D'INSTALLATION

Applies to Components:
1XB04SR*xxx*
1XDXXSR01*x-xx*

Connecting Linear Rotational Luminaire to Single Rod Luminaire Hanger:

1. Align **Linear Rotational Luminaire** with both **Hangers** (Fig. 1).
2. Insert **Luminare** onto **Hangers** and secure with **Set Screws** (Fig. 2). **Note:** Luminaire can rotate 360° (Fig. 2).

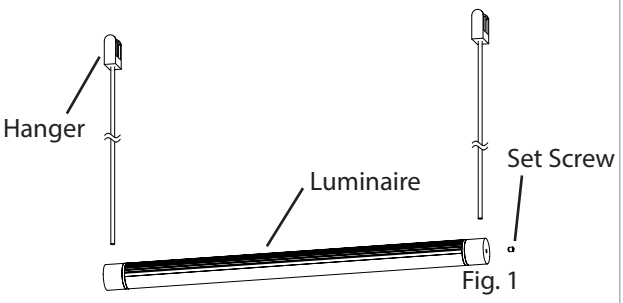

Fig. 1

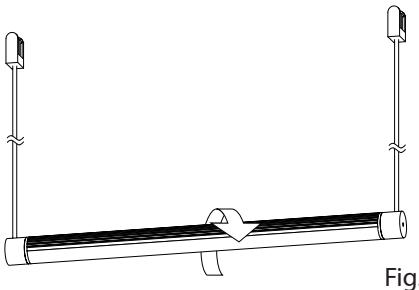
Fig. 2

Single Rod Luminaire Hanger:

1. Make sure **Spring Contacts** of each **Hanger** face opposite directions (Fig. 3).
2. Align **Hanger** with **Power Bar** (Fig. 4) and press down firmly on the top of the Power Bar, while pressing up on the bottom of the Hanger, until the Power Bar clicks into place. (Fig. 5)

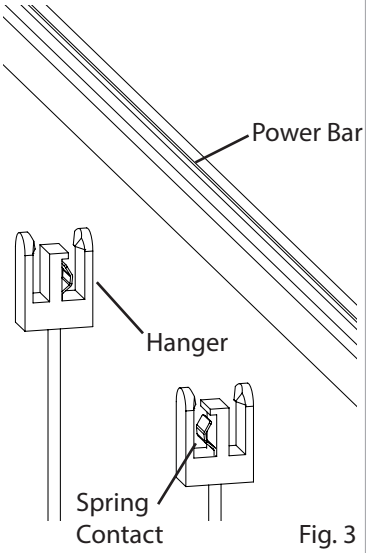

Fig. 3

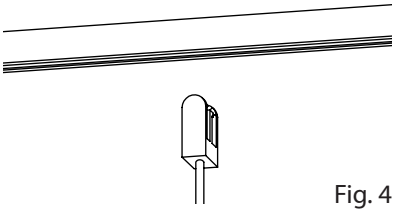
Fig. 4

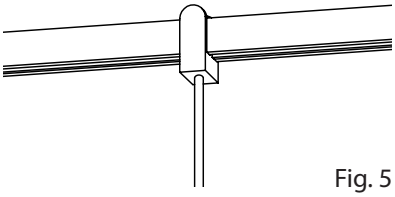
Fig. 5

Connecting Linear Rotational Luminaire to Single Rod Outrigger Luminaire Hanger:

1. Align **Linear Rotational Luminaire** with both **Hangers** (Fig. 1).
2. Insert **Luminare** onto **Hangers** and secure with **Set Screws** (Fig. 2). **Note:** Luminaire can rotate 360° (Fig. 2).(Fig. 2).

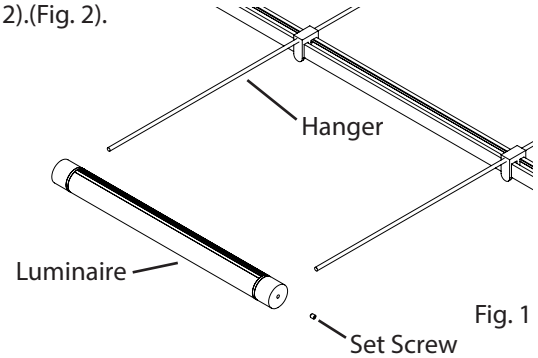

Fig. 1

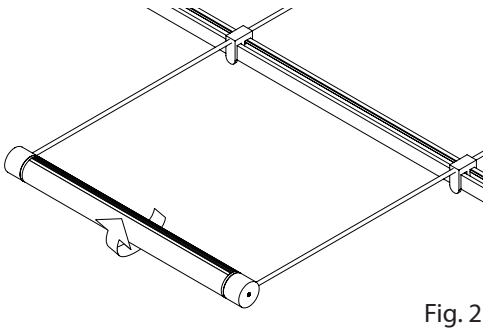
Fig. 2

Single Rod Luminaire Hanger:

1. Make sure **Spring Contact** of each **Hanger** opposes each other (Fig. 3).
2. Align **Hanger** with **Power Bar** (Fig. 4) and press up firmly on the bottom of the Power Bar, while pressing down on the top of the Hanger, until the Power Bar clicks into place (Fig. 5).

Applies to Components:
1XB04SR16*x*-RG
1XDXXSR01*x-xx*

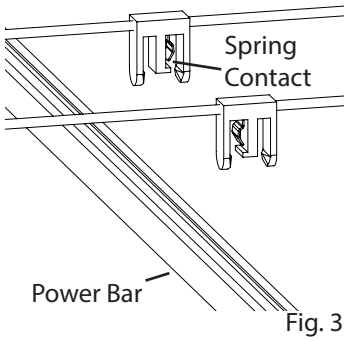

Fig. 3

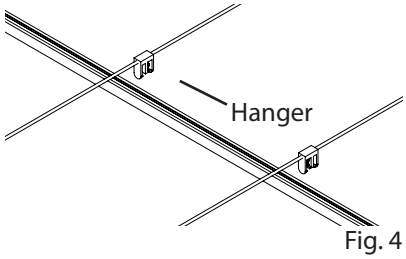

Fig. 4

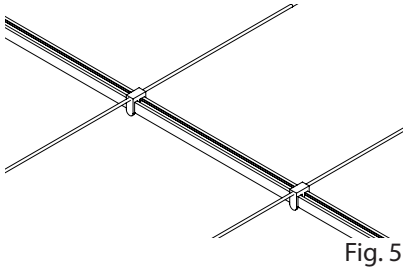
Fig. 5

©2019 SONNEMAN - A WAY OF LIGHT

SONNEMAN
A WAY OF LIGHT

June 10, 2019

Luminaires and Luminaire Hangers

Assembly Instructions

INSTRUCTIONS D'INSTALLATION

Applies to Components:	
1XDXXRH01*x*	**1XDXXRH05*x***
1XDXXRH02*x*	**1XDXXRH06*x***
1XDXXRH03*x*	**1XB04RH00*x***
1XDXXRH04*x*	**1XB04RH01*x***

Precise Blade Mount Hanger and Precise Bar-Mounted Aimable Light Engine:

1. Align **Hanger** with **Power Bar** (Fig. 1) and press down firmly on the top of the Power Bar, while pressing up on the bottom of the Plug, until the Power Bar clicks into place (Fig. 2).
2. Align **Light Engine** with **Blade Mount Hanger** (Fig. 1), connect Light Engine to Blade Mount Hanger (Fig. 2).
3. Secure **Light Engine** to **Blade Mount Hanger** by screwing on **Retention Ring** (Fig. 3).

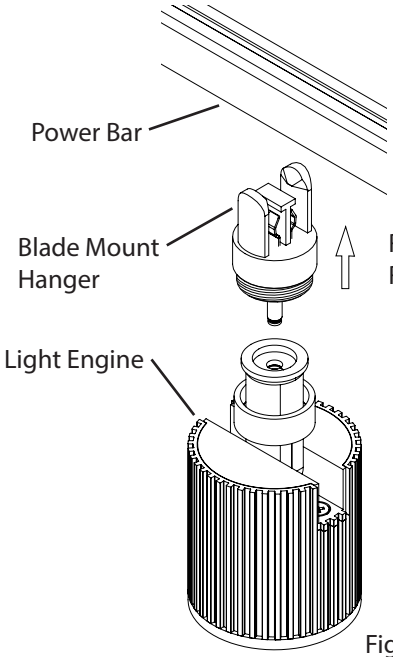

Fig. 1

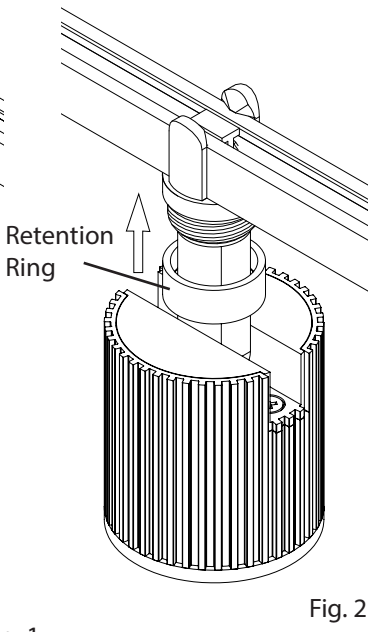

Fig. 2

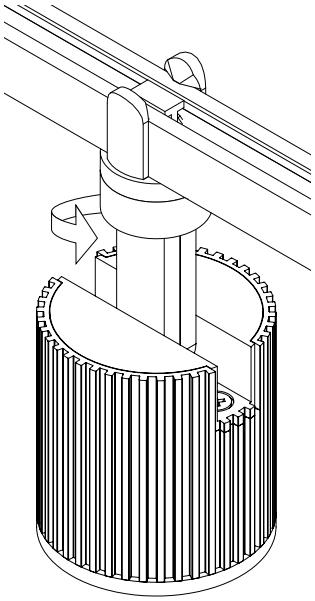

Fig. 3

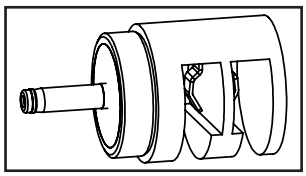

Applies to **Precise Wall Blade Mount Hanger**

Connecting an HC*xx* Luminaire to a Cluster Luminaire Hanger (Fig. 2):

1. Insert the two **Rods** of the **Cluster Luminaire Hanger** and the bottom **Luminaire** into the **Center Hub**.
2. Use the included **Allen Key** to tighten the four **Set Screws**.

Applies to Components:
1XDXXHC*xxx*
1XB04HR*xxx*

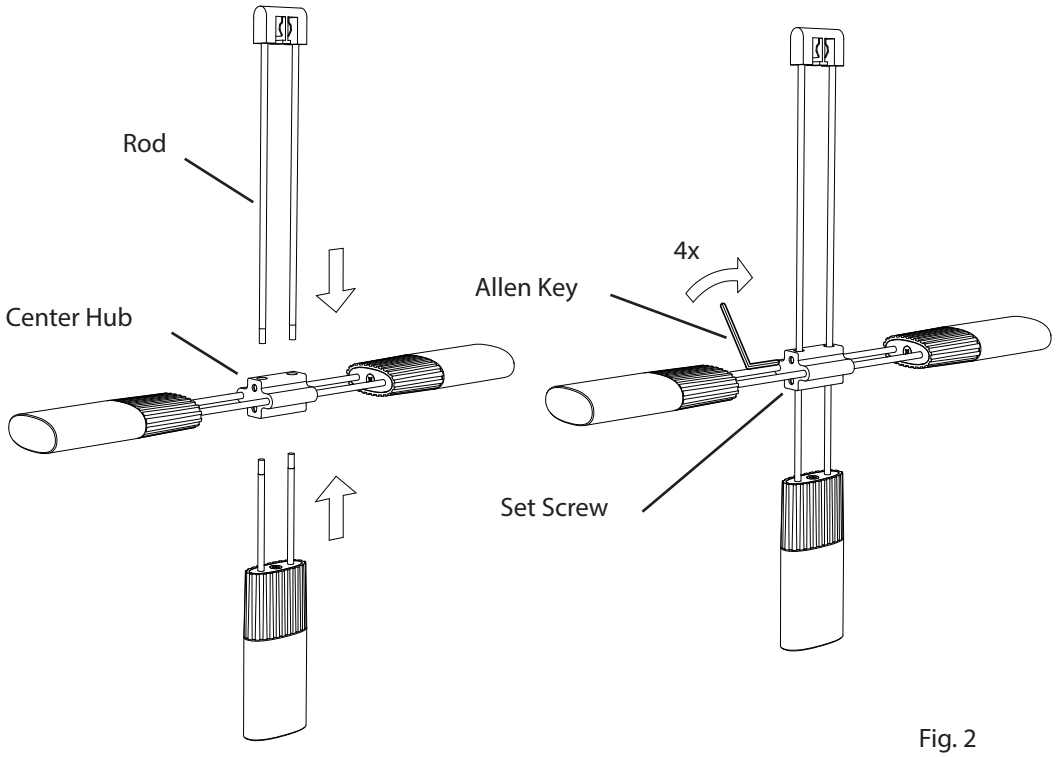

Fig. 2

©2019 SONNEMAN - A WAY OF LIGHT

SONNEMAN
A WAY OF LIGHT

Luminaires and Luminaire Hangers

Assembly Instructions

INSTRUCTIONS D'INSTALLATION

Mezzaluna Luminaire:

Applies to Components:
1XDXXCH06*x*

1. Align **Luminaire** with **Power Bar** (Fig.1), press down firmly on the top of the Luminaire, while pressing up on the bottom of the Power Bar, until the Power Bar clicks into place (Fig. 2).
2. **Mezzaluna Luminaires** can be assembled on top or on the bottom of the **Power Bar**. Two Luminaires can be assembled in the same location of the Power Bar on opposite sides (Fig. 3).

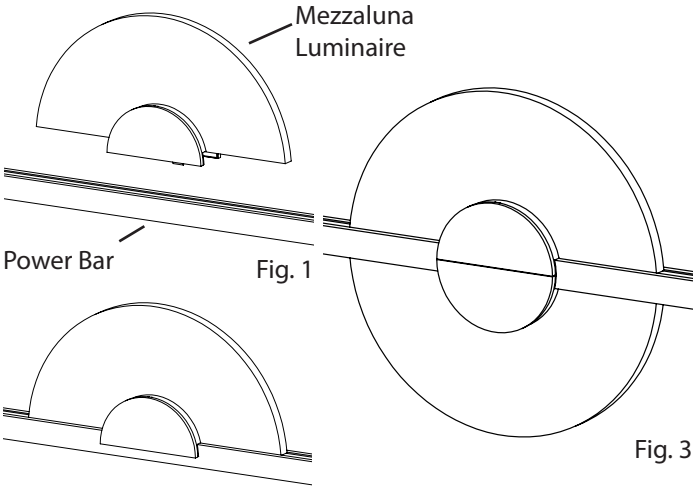

Fig. 1

Fig. 2

Fig. 3

Precise Direct Mount:

Applies to Components:
1XDXXCH01*x*-X **1XDXXCH05*x*-X**
1XDXXCH04*x*-X

1. Align **Luminaire** with **Power Bar** (Fig. 1), press up firmly on the bottom of the Luminaire, while pressing down on the top of the Power Bar, until the Power Bar clicks into place (Fig. 2).

Note: Precise Direct Mount Luminaires can be assembled on top or on the bottom of the **Power Bar**.

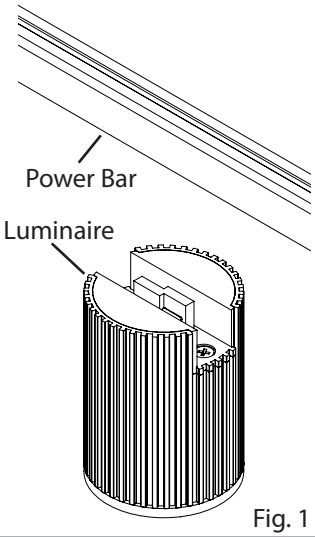

Fig. 1

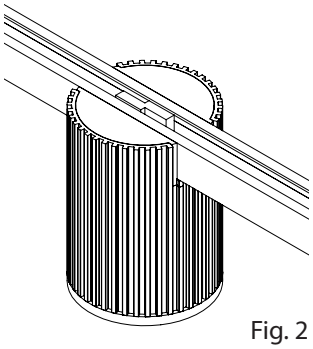

Fig. 2

Connecting a Suspenders Precise Bar-Mounted Hub for Duplex Light Engines to a Power Bar:

Applies to Components:
1XB04CH00*x* **1XDXXCH03*x***
1XB04CH01*x* **1XDXXCH04*x***
1XDXXCH01*x* **1XDXXCH07*x***

1. Place the **Hub** over the **Power Bar** then press down firmly on top of **Hub**, while pressing up on the bottom of the **Power Bar**, until the Hub clicks into place (Fig. 1).
2. Attach the **Hub Cover** to the Hub, making sure the counter-sunk holes on the cover are facing inward. Secure using two small **Thumb Screws** (Fig. 2).
3. Install the **Cylinder Light Engine** to the **Hub** by inserting the contacts on the Hub into the slots on the Light Engine (Fig. 3), then twisting the Light Engine to the ends of the slots (Fig. 4). **Note:** Flip **Hub Cover** to change to single direction (Fig. 5).

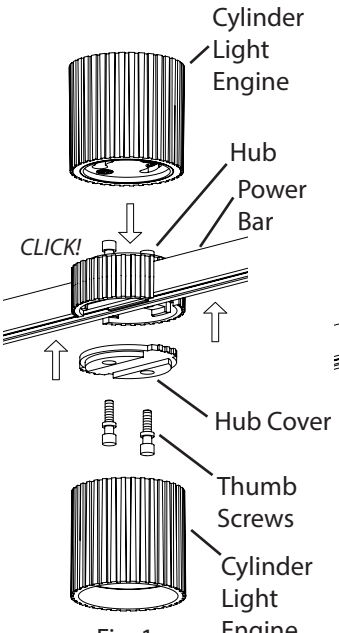

Fig. 1

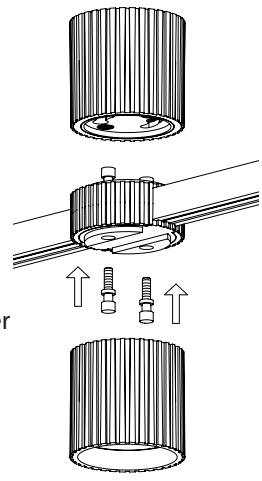

Fig. 2

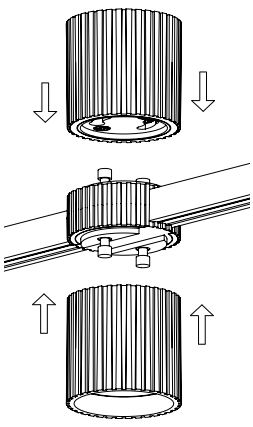

Fig. 3

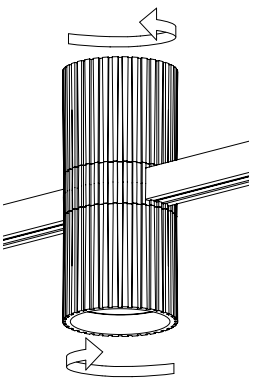

Fig. 4

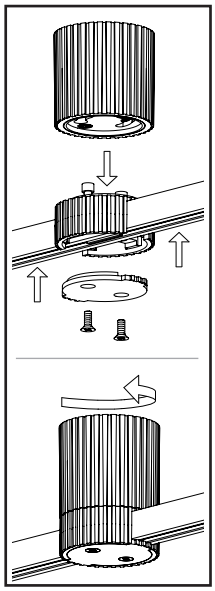

Fig. 5

©2019 SONNEMAN - A WAY OF LIGHT

SONNEMAN
A WAY OF LIGHT

June 10, 2019

Suspenders Precise™ Trim Kits

Assembly Instructions

INSTRUCTIONS D'INSTALLATION

Connecting a Trim to a Cylinder Light Engine:

1. Insert the **Trim Ring** into the **Shade**. (Fig. 1)
2. Screw the **Trim Ring** into the **Cylinder Light Engine**. (Fig. 2)

Applies to Components:

1XZ010010*x*	**1XZ010013*x***
1XZ010011*x*	**1XZ020701*x***
1XZ010012*x*	**1XZ020801*x***

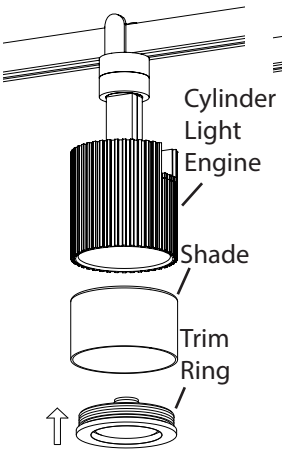

Fig. 1

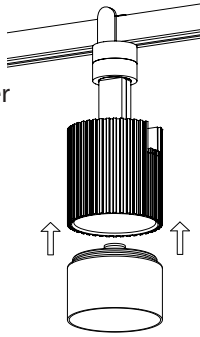
Fig. 2

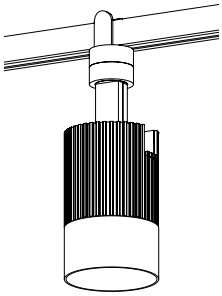

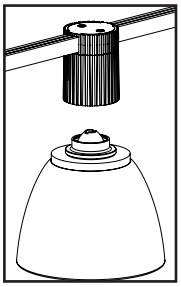
Applies to
Glass Shade Trims

Power Precise Round Trims:

1. Align the **Lens**, **Shade**, and **Bezel** with each other (Fig. 3) then preassemble them together (Fig. 4).
2. Align the assembly from step 1 with the **Light Engine** (Fig. 5).
3. Screw the assembly from step 1 to the **Light Engine** (Fig. 5).

Applies to Components:

1XZ0202*xxx*	**1XZ0205*xxx***
1XZ0203*xxx*	**1XZ0206*xxx***

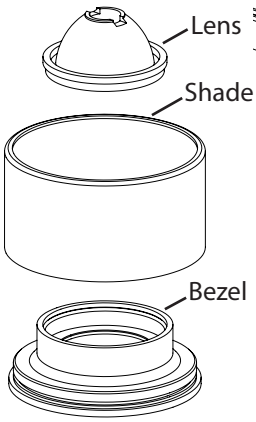

Fig. 3

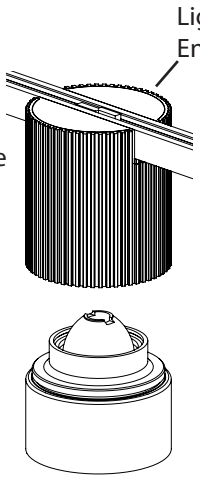

Fig. 4

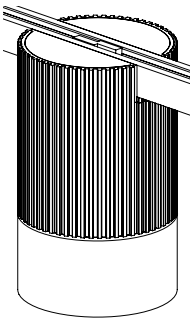
Fig. 3

Connecting a Trim to a Cylinder Light Engine:

1. Screw the **Trim Ring** into the **Cylinder Light Engine** (Fig. 1).

Applies to Components:

1XZ010001*x*	**1XZ010017*x***
1XZ010002*x*	**1XZ010018*x***
1XZ010003*x*	**1XZ010019*x***
1XZ010015*x*	**1XZ0201*xxx***
1XZ010016*x*	

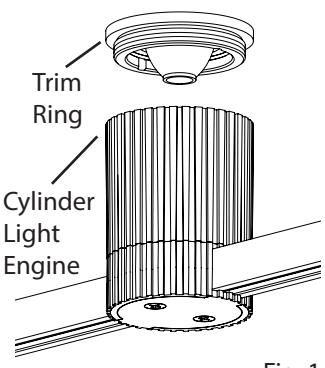

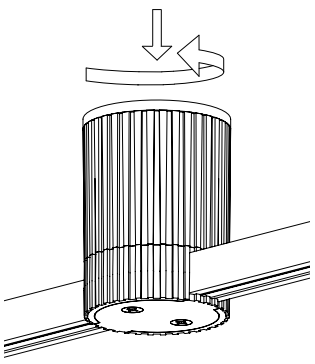
Fig. 1

Connecting a Trim to a Cylinder Light Engine:

1. Place a rubber **O-Ring** on each **Arm** on the **Parachute Reflector Rrim** (Fig. 2).
2. Bend the **Parachute Reflector** and pass each hole over an **Arm** (Fig. 3).
3. Place another O-Ring on each **Arm** and adjust the o-rings to set the desired reflector position (Fig. 4).
4. Place the **Reflector Ring** on the **Cylinder Light Engine** and adjust to the desired angle (Fig. 5).
5. While holding the reflector ring in place, screw the **Trim Ring** into the **Cylinder Light Engine** (Fig. 6).

Applies to Components:

1XZ010004*x*	**1XZ010005*x***

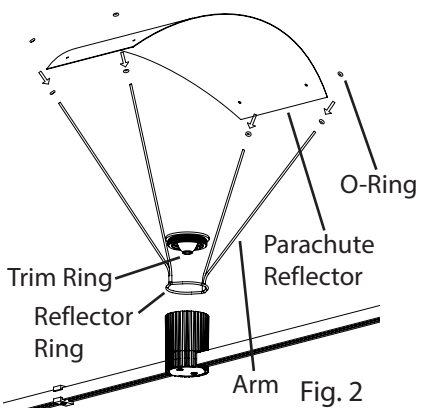

Fig. 2

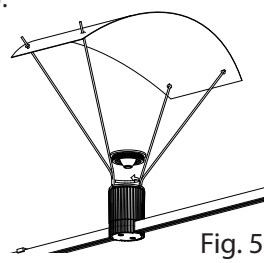
Fig. 5

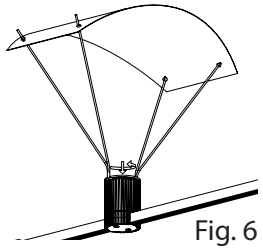
Fig. 6

©2019 SONNEMAN - A WAY OF LIGHT

June 10, 2019

SONNEMAN
A WAY OF LIGHT

Suspenders Precise™ Trim Kits

Assembly Instructions

INSTRUCTIONS D'INSTALLATION

Applies to Components:
1XZ03010*xx* **1XZ03030*xx***
1XZ03020*xx*

Power Precise Square Trims:

1. Align **Trim** with **Light Engine**, make sure to align the **Notch** found on the Trim to the **Set Screw** found on the Light Engine (Fig. 1).
2. Insert the **Trim** into the **Light Engine** (Fig. 2).
3. Secure the **Trim** by screwing in the **Set Screws** (Fig. 3).

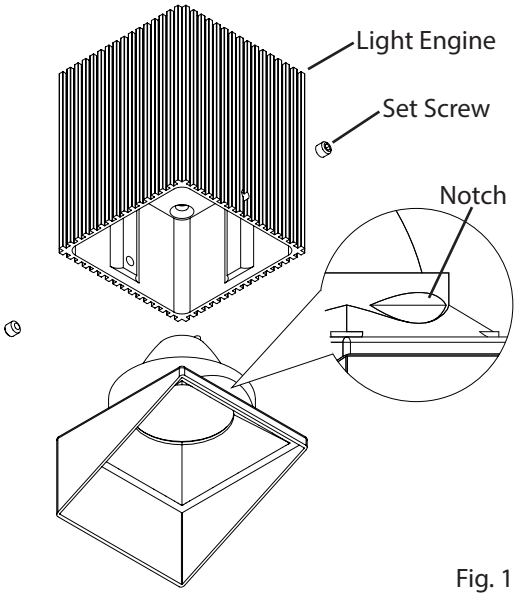

Fig. 1

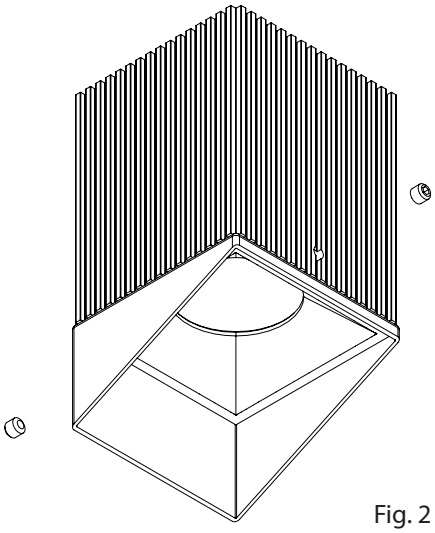

Fig. 2

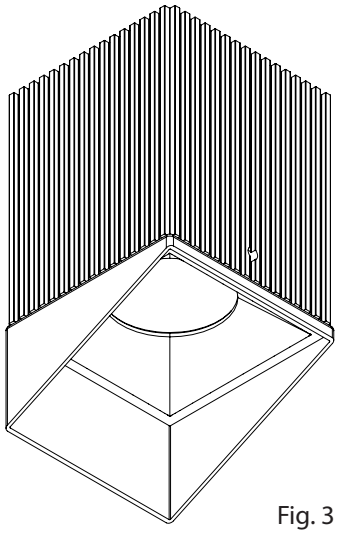

Fig. 3

Applies to Components:
1XZ04000*xx*

Precise Cell Luminaire Trims:

1. Align **Trim Subassembly** with **Light Engine**. **Note: Beam Angle Mark** is visible on the **Trim Subassembly** (Fig. 1).
2. Snap **Trim Subassembly** into **Light Engine**, press up firmly on the bottom of the Trim Subassembly, while pressing down on the top of the Light Engine, until the Trim Subassembly clicks into place (Fig. 2). **Note:** Use the **Notch** on the enclosure to help detach the trim.

Beam Angle Mark	Beam Angle
D10	10°
D24	24°
10X35	10°X35°
D48	48°

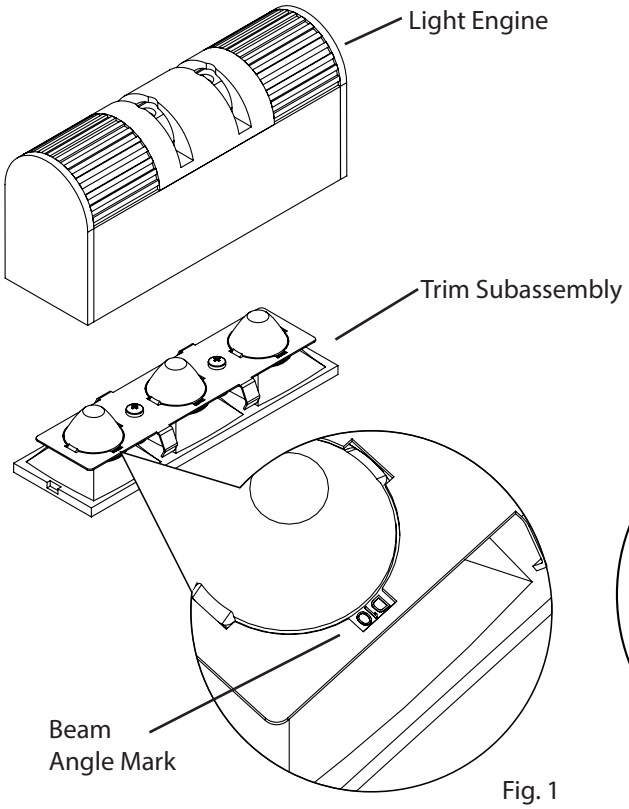

Fig. 1

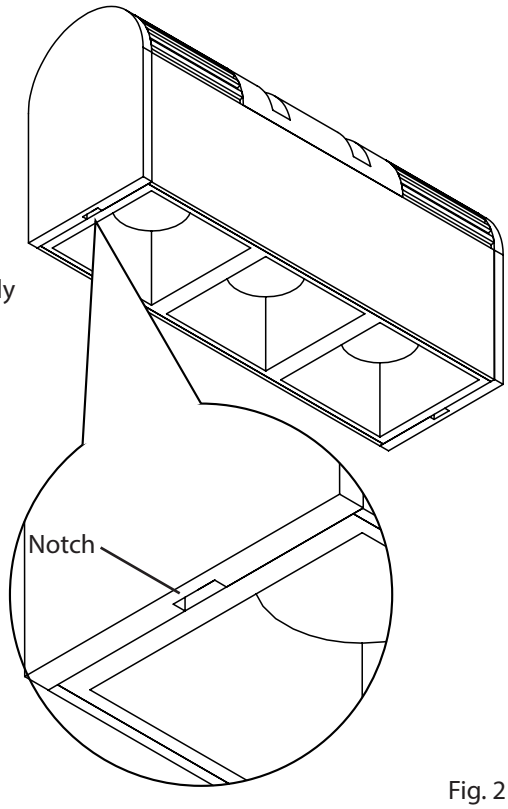

Fig. 2

©2019 SONNEMAN - A WAY OF LIGHT

Component Index

Item Number	Page	Item Number	Page	Item Number	Page
1XC02XX12x	2	1XB02TR06x-EX	11	1XDXXRH02x	20
1XC02XX24x	2	1XB03TR16x-EN	11	1XDXXRH03x	20
1XC01XX12x	2	1XB03TR16x-EX	11	1XDXXRH04x	20
1XC01XX24x	2	1XB02TR20x-EN	11	1XDXXRH05x	20
1XC01XX36x	2	1XB02TR20x-EX	11	1XDXXRH06x	20
1XC01XX48x	2	1XZ05000xx	11	1XB04RH00x	20
1XC01XX72x	2	1XB03PR00x	12	1XB04RH01x	20
1XC01XX96x	2	1XB03IB00x	12	1XDXXHCxxx	20
1XB01SC06x	3	1XB03DC16x	12	1XB04HRxxx	20
1XB01SC20x	3	1XDXXRPxxx	13	1XDXXCH06x	21
1XB01RC06x	3	1XB04ARxxx	13	1XDXXCH01x-X	21
1XB01RC20x	3	1XB04DRxxx	13	1XDXXCH04x-X	21
1XB01DC06x	3	1XB04DR16x-RG	13	1XDXXCH05x-X	21
1XB01DC20x	3	1XB04RDxxx	13	1XB04CH00x	21
1XB01DR06x	3	1XB04ARxxx	14	1XB04CH01x	21
1XB01DR12x	3	1XB04RDxxx	14	1XDXXCH01x	21
1XB01DR18x	3	1XDXXRH07x	14	1XDXXCH03x	21
1XB01IC06x	3	1XDXXCL14x-XX	15	1XDXXCH04x	21
1XB01IC20x	3	1XDXXCL16x-XX	15	1XDXXCH07x	21
1XB01PT00x	4	1XZ990007x	15	1XZ010010x	22
1XB02SB06x	5	1XZ990010x	15	1XZ010011x	22
1XB02SB20x	5	1XDXXCL13x	15	1XZ010012x	22
1XB02SB06x-ST	5	1XDXXCLxxx-xx	15	1XZ010013x	22
1XB02SB20x-ST	5	1XDXXVCxxx-xx	15	1XZ020701x	22
1XB02RB06x	5	1XB04CL09x	16	1XZ020801x	22
1XB02RB20x	5	1XB04CL18x	16	1XZ0202xxx	22
1XB02SR18x	5	1XDXXCL01x	16	1XZ0203xxx	22
1XB02IB06x	6	1XDXXCL02x	16	1XZ0205xxx	22
1XB02IB20x	6	1XDXXCL03x	16	1XZ0206xxx	22
1XB02IB06x-ST	6	1XZ990001x	17	1XZ010001x	22
1XB02IB20x-ST	6	1XDXXLL01x	17	1XZ010002x	22
1XB02IR18x	6	1XDXXLB12x	18	1XZ010003x	22
1XB02WL00x	7	1XDXXLB24x	18	1XZ010015x	22
1XB02WL01x	7	1XDXXLB36x	18	1XZ010016x	22
1XB03WP00x	7	1XZ990005x	18	1XZ010017x	22
1XB02CE00x	8	1XB04LB06x	18	1XZ010018x	22
1XB02CE01x	8	1XB04LB12x	18	1XZ010019x	22
1XB03RD00x	8	1XB04LB18x	18	1XZ0201xxx	22
1XB03ARxxx	9	1XDXXLBxxx-S	18	1XZ010004x	22
1XB03ER18x	9	1XB04SRxxx	19	1XZ010005x	22
1XB03PRxxx	10	1XDXXSR01x-xx	19	1XZ03010xx	23
1XB03RDxxx	10	1XB04SR16x-RG	19	1XZ03020xx	23
1XB03RSxxx	10	1XDXXSR01x-xx	19	1XZ03030xx	23
1XB02TR06x-EN	11	1XDXXRH01x	20	1XZ04000xx	23

©2019 SONNEMAN - A WAY OF LIGHT

June 10, 2019

SONNEMAN
A WAY OF LIGHT

Power Feed Installation

Assembly Instructions

INSTRUCTIONS D'INSTALLATION

Applies to Component:
1XA05SG02*x*

Important

- **Always disconnect the power before installing or replacing components and before cleaning or other maintenance.**
- **Consult a qualified, licensed electrician to ensure correct branch circuit conductor.**
  Consulter un électricien qualifié pour vous assurer que les conducteurs de la dérivation sont adéquats.

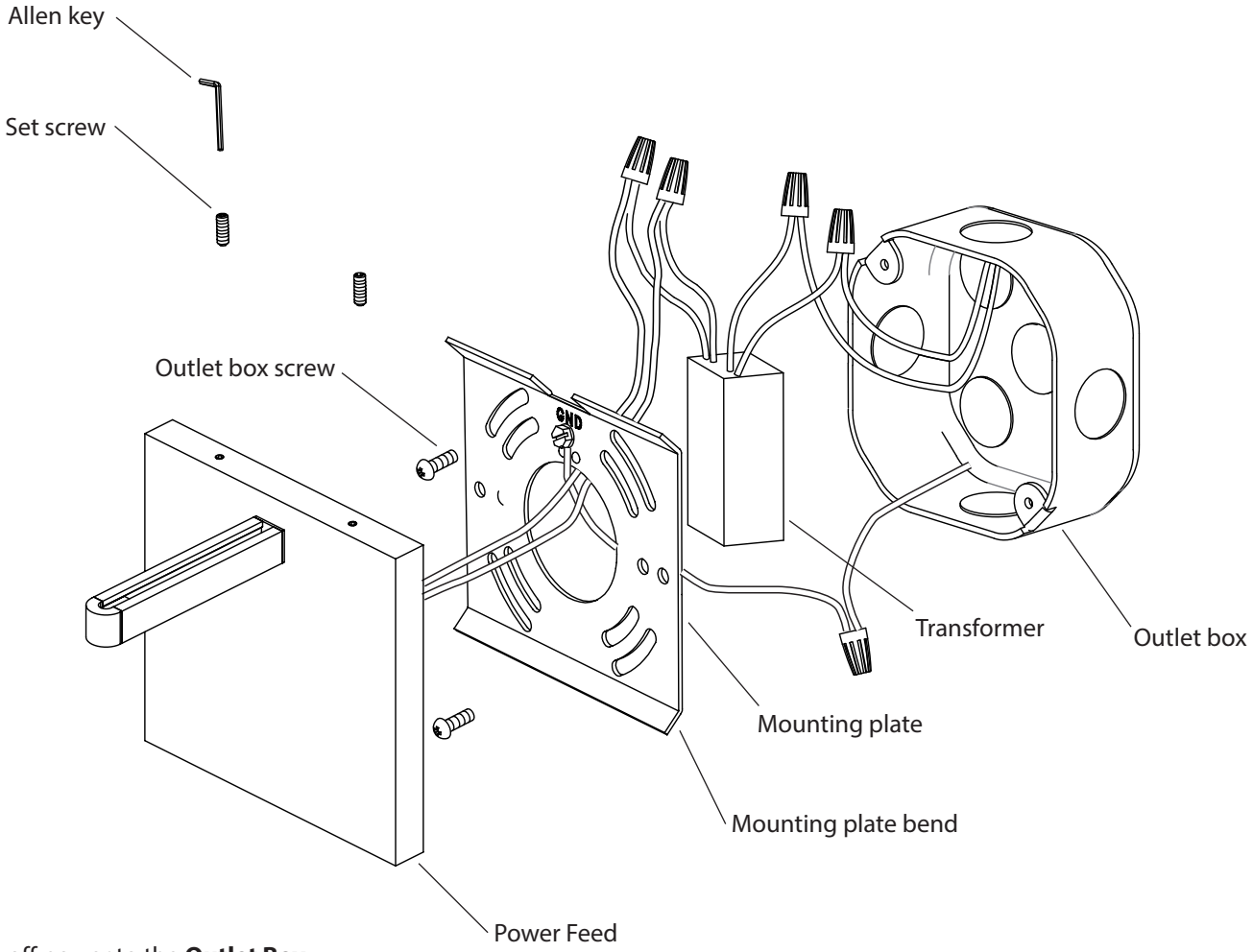

1. Shut off power to the **Outlet Box**.
2. Make appropriate electrical connections using wire nuts:
   a. Connect the **Transformer's** live wire (black) to the live **Outlet Box** wire.
   b. Connect the Transformer's neutral wire (white) to the neutral Outlet Box wire.
   c. Connect the ground Outlet Box wire (green or uncoated) to the **Mounting Plate** using the green screw.
   d. Connect one of the **Power Feed** wires to one of the Transformer output wires. Connect the other Power Feed wire to the second Transformer output wire.
   e. Carefully place connections in Outlet Box.
   NOTE: This Power Feed has been rated for a max 75W Transformer.
3. Attach the **Mounting Plate** to the **Outlet Box**, secure with **Outlet Box Screws**.
4. Install the **Power Feed** to the **Mounting Plate** by hooking the bend onto the bracket in the Power Feed. Secure with **Set Screws** using included **Allen key**.

Note

- **This fixture is dimmable with Electronic Low Voltage (i.e., Trailing-Edge/Reverse Phase) type dimmers ONLY.**

©2019 SONNEMAN - A WAY OF LIGHT

SONNEMAN®
A WAY OF LIGHT

June 10, 2019

Suspenders® - Standard Single Sconce Configuration

Assembly Instructions

INSTRUCTIONS D'INSTALLATION

Important

- **Always disconnect the power before installing or replacing components and before cleaning or other maintenance.**
- **Consult a qualified, licensed electrician to ensure correct branch circuit conductor.**
  Consulter un électricien qualifié pour vous assurer que les conducteurs de la dérivation sont adéquats.

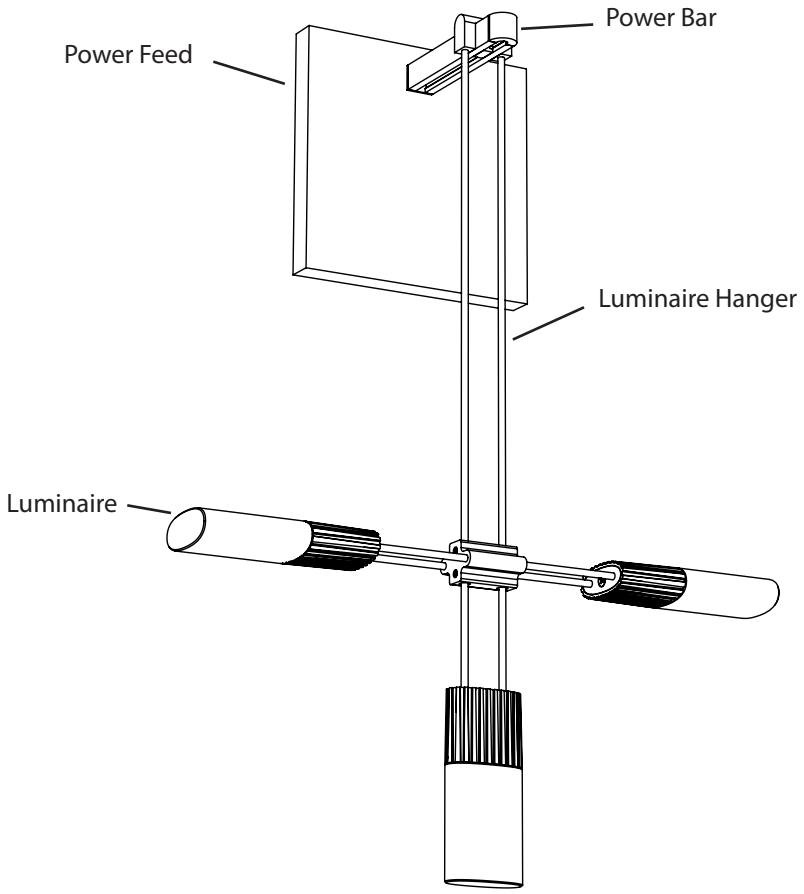

1. Shut off power to the outlet box.
2. Assemble the **Power Feed** as shown on page 25.
3. Connect the **Luminaire** to the **Luminaire Hanger** as shown on pages 13-21.
4. Connect the **Luminaire Hanger** the **Power Bar** as shown on pages 13-21.
5. Restore power to the outlet box.

Note

- **This fixture is dimmable with Electronic Low Voltage (i.e., Trailing-Edge/Reverse Phase) type dimmers ONLY.**

©2019 SONNEMAN - A WAY OF LIGHT